DOCUMENT 00 91 13

Addendum Number Two

DATE: November 23, 2026

PROJECT: FM52709
ITD D5 Cherry Creek Residence Demo
Malad, Idaho

ARCHITECT'S
PROJECT NO.: 26720

OWNER: Idaho Transportation Department
3311 West State Street
Boise, Idaho 83703

ARCHITECT: Myers Anderson Architects, PLLC
122 South Main Street, Suite 1
Pocatello, Idaho 83204

TO: Prospective Bidders

This Addendum forms a part of the Contract Documents and modifies the Bidding Documents dated October 2026.

Acknowledge receipt of this Addendum in the space provided in the Bid Form. Failure to do so may disqualify the Bidder.

This Addendum consists of four (4) pages plus attachments. **Total: twenty-nine (29) pages.**

GENERAL

1. Any bidder who obtained their bid documents from the ITD website prior to 11/13/26, may not have been provided the full bid packet document. Those bidders are instructed to either redownload the full bid packet or contact the office of the architect at maa@myersanderson.com to obtain the full bid documents.
2. The Pre-bid Conference Attendance Sheet is attached for reference.
3. Construction signage for this project will be the responsibility of the General Contractor.
4. General Contractor is responsible for demolition and appropriate disposal of all items remaining in the residence, including but not limited to stove, water heater, dishwasher, etc.
5. The waste line exiting the building shall be capped at the septic tank per the drawings.
6. The (4) ground source heat-pump piping shall be removed in its entirety. Evacuate all liquids from piping and legally dispose of glycol waste fluids.
7. Each of the (4) ground source wells associated with the residence shall be properly decommissioned per Rule 30, item 07 Decommissioning of Wells, IDAPA 37 – Department of Water Resources, Water Compliance Bureau 37.03.09 – Well Construction Standards Rules.

QUESTIONS AND RESPONSES

Item #	Question	Response
1	Sod: Sheet SP101 calls for new sod over the utility and heat pump excavations. Please provide the required sod type or grass blend and any topsoil depth or establishment requirements bidders should include.	Sod Requirements: Sod grass to be a bluegrass blend, locally grown, and 1-year-old minimum. Place over 9" of a 4:1 ratio of topsoil to compost. Lightly compact for new sod; sits at the same elevation as surrounding grades. Topsoil to be fertile, friable loam, 5.5-7.0 pH, 4% organic material minimum, free of rocks, clay, roots, plant material, and other deleterious materials greater than 1 inch. Soil shall not contain any toxic matter harmful to the growth of plants. Test soil for available nutrients, acidity, and texture by a recognized commercial or government agency. Amend soil as needed to meet specified requirements. Soil to meet ASTM D5268
2	Aggregate: Sheet SP100 calls for structural fill, and SP101 shows compacted road base with a 2-inch gravel topping. Please provide Section 31 00 00 and confirm the required material type and gradation for the structural fill, road base, and gravel topping, including any applicable ITD standard specification sections.	Refer Specification Section 31 00 00 - Earthwork in the full bid packet document.
3	Asbestos: The table of contents lists Section 02 41 10, Asbestos Containing Materials Work Practices and Disposal. Please provide that section and any existing asbestos or hazardous materials survey, including lab results, for Building 002. If a survey has yet to be completed, will ITD provide one before demolition, or should bidders include it in the base bid? Please also clarify what abatement, if any, bidders should carry and whether materials identified after bidding will be addressed by change order.	Refer to Specification Section 02 41 10 – Asbestos Containing Materials Work Practices and Disposal in the full bid packet document as well as Addendum #1 which provides clarification regarding any asbestos containing materials. If asbestos is discovered, abatement will be handed with a change order to the contractor.
4	Existing Foundation: Does the residence have a full basement, crawlspace, or slab-on-grade foundation? Is the entire foundation, including footings, required to be removed?	All footings and foundations are required to be removed in their entirety with structural fill brought back in their place. The original building drawings have been provided as an attachment for reference only.
5	Backfill Materials: Sheet SP101 calls for compacted road base placed in 12-inch lifts to 95% compaction, with 2 inches of gravel topping. Is 3/4-inch minus road base required for the entire excavation depth, or would pit run or approved structural fill be acceptable for the deeper backfill?	Refer to specification section 31 00 00 - Earthwork for acceptable materials.
6	Utility Trenches: Are the trenches from removing the existing underground utilities also required to be backfilled with road base, or can approved	Approved native materials can be reused and compacted when backfilling utility trenches.

Myers Anderson Architects, PLLC
122 South Main Street, Suite 1
Pocatello, Idaho 83204
208.232.3741
www.myersanderson.com

	native material be reused and compacted before restoring the surface?	
7	Is there an estimated start date?	ITD intends to award the contract within 45 days of receiving bids with work taking place as soon as the contract is in place. ITD generally responds quickly to receiving bids therefore demolition could easily begin in December of 2026.
8	Is there a fire hydrant close to the property that we would be able to use if needed?	There is not a fire hydrant on site. The only water available is the domestic water connection tied to the house.
9	What type of foundation is the structure on?	The majority of the home has a 3'-0" crawlspace with standard footings and foundations. Refer to the original building drawings, which have been provided as an attached for reference only.
10	Will temporary electrical be available for use at the rest stop?	Contractor can tie into existing power provided to home, but no other power sources are available at the rest stop for use by the contractor. Contractor will be responsible for providing their own temporary power if required for the scope of work.
11	Property Insurance: I'm looking for clarification on the insurance requirements for "All Risk" Builders Insurance. Our insurance agent doesn't believe Builder's Risk Insurance is needed for this project because it is meant to cover new structures or existing structures under renovation and insures the materials and equipment being installed. There is also no mention of limits of insurance.	The Property Insurance language in the bid packet is standard for all State of Idaho Projects; however, since the project scope is primarily demolition, "All Risk" Builders Insurance will not be required. Refer to Article 21 of the Fixed Price Construction Contract in the bid packet, pages FPCC-24 to FPCC-27 for required Contractor insurance including limits.
12	Can you clarify: Does the residency requirement apply to existing employees brought into Idaho temporarily for this short-term project? Is an exception or waiver available, or can documented good-faith attempts to hire qualified Idaho residents satisfy the requirement? How is the 10% nonresident allowance calculated for a crew of fewer than 10 people? Are Idaho-resident subcontractor employees included in that calculation, or is each contractor evaluated separately?	We have not identified an exception, as the requirements is established in Section 44-1001 of the Idaho Code. For public works projects, we are required to retain this language in the contract documents. You may still bid on the project; however, if awarded the contract, you will be required to hire bona fide Idaho residents as specified in the code.
13	Will the uneven area on the property need to be graded as part of the demolition and site restoration?	Work along the front fence line should be backfilled to the existing grade. Any disturbance to the site from demolition work shall be restored to existing conditions, maintaining existing water flows. No additional grading work is required.

14	Is there a basement in the residence?	The original building drawings have been provided as an attachment for reference only.
15	Who is responsible for coordinating and handling the required compaction testing?	Owner will engage a qualified testing agency to conduct special tests and inspections required by authorities having jurisdiction
16	Depth of geothermal/heat pump lines on the north side of the residence?	See existing drawings provided for reference as part of this addendum for limited information.
17	The project specifications indicate that plan review has already been paid by the owner and that the contractor is responsible for the building, electrical, and site-disturbance permits. Could you please provide the remaining permit costs, or direct me to whoever can confirm them?	No building permit is required. Plumbing, HVAC, and electrical permits shall be coordinated through the building program at Idaho Division of Occupational and Professional Licenses

SPECIFICATIONS

1. Specification section 31 00 00 Earthwork, Part 3, Paragraph 3.11 Quality Control, sub-paragraph A., Material & Compaction Testing shall be revised per specification section 01 40 00 Quality Requirements. Owner will engage a qualified testing agency to conduct special tests and inspections required by authorities having jurisdiction as the responsibility of Owner.

ATTACHMENTS

Pre-bid Conference Attendance Sheet
Original Building Drawings (for reference only)

End of Addendum No. 2

Myers Anderson Architects, PLLC
122 South Main Street, Suite 1
Pocatello, Idaho 83204
208.232.3741
www.myersanderson.com

PREBID CONFERENCE ATTENDANCE SHEET
ITD D5 Cherry Creek Residence Demo

Name	Company	Email	Phone
Jaren Hope	Myers Anderson Architects	jaren@myersanderson.com	(208) 232-3741
Jerry Bauer	ITD	jerry.bauer@itd.idaho.gov	208 201 3509
Kaleb Anderson	Morris Excavation	[redacted] Morrisexcavation636@gmail.com	208-251-6430
Austin Ford	Oak Ridge Const.	austin.oakridge@outlook.com	(208)313-4966
Matt Woodbury	Oak Ridge Const.	matt.oakridge@outlook.com	801-889-3436
Amanda Earl	ITD	Amanda.Earl@ITD.idaho.gov	208 334-8622
Victor/Kris Lyon	KT Excavation	KTX83246@Hotmail.com	435-720-7975

INDEX OF SHEETS		
SHEET NO	DESCRIPTION TITLE SHEET	STA. TO STA.
1	Vicinity Sketch	
2	Project Clear. Sum.	
3	Typical Sections	
5-6	Summaries	
7-8	Plan Sheets	
9-14	Perm. Signing	
15-18	Ramp Illumination	
1A-40A	Architectural Plans	
1-12	Elect., Plumb., Mech.	

FEDERAL ROAD REGION NO.	STATE	FEDERAL AID PROJECT NO.	TOTAL SHEETS	SHEET NO.
10	IDAHO	IR-15-1(73)7	18	1

STATE OF IDAHO
TRANSPORTATION DEPARTMENT
DIVISION OF HIGHWAYS

PLAN AND PROFILE OF PROPOSED
INTERSTATE HWY. NO. 15
FEDERAL AID PROJECT NO. IR-15-1(73)7
BANNOCK & ONEIDA COUNTIES

BOISE, *June*, 1989

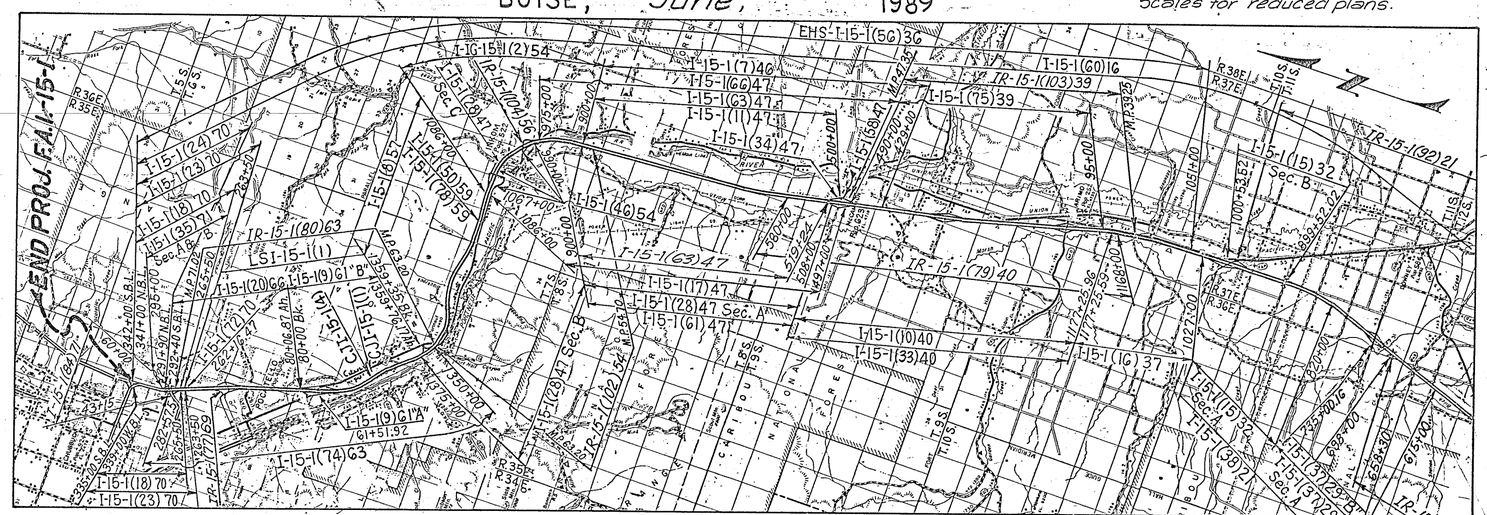

Scale of Miles
0 1 2 3

Populations from 1970 U.S. Census

Standard Drawings

Metal Apron for Pipe Culverts	D-5
Conduit Installation	D-12
Manhole Type A	E-7
Manhole Cover and Frames	E-9
Right of Way Fences (1 of 2)	F-2-A
Fencing Details (2 of 2)	F-2-A
Curbs, Gutters, Traffic Separators and Raised Channelized End Treatment	H-1
Urban Approaches and Concrete Sidewalk	H-2-A
Construction Signing Two Lane, One Way Highways	I-1-B
Sign Foundation and Sign Placement	I-8-A
Breakaway Sign Posts Type A	I-8-B
Breakaway Sign Posts Type B	I-8-C
Breakaway Sign Posts Type E	I-8-F
Slot and Clip Spacing Brac Angle Detail	I-9-A
Cardinal Route Marker Assemblies	I-9-B
Route Marker Bracket Details	I-9-C
Extruded Aluminum Signs	I-10-A
Standard Route Markers	I-11-A
Route Marker Numeral Details	I-11-B
Route Marker Auxiliary Panels	I-11-C
Standard Regulatory Signs	I-12-A
Selective Exclusion Sign Details	I-12-C
Standard Warning Signs	I-12-D
Punching Schedule for Ty. B or E signs	I-12-F
Standard Guide and Service Signs	I-13-A

PLANIMETRIC CONVENTIONAL SIGNS

STATE LINE
COUNTY LINE
TOWNSHIP LINE
SECTION LINE
FENCE LINE, EXISTING
FENCE LINE, TO CONSTRUCT
UNFENCED PUBLIC OR PRIVATE PROPERTY
RIGHT OF WAY LINE
PARTIAL CONTROL OF ACCESS LINE
FULL CONTROL OF ACCESS LINE
EXISTING ROAD
BASE OR SURVEY LINE
RAILROADS
BRIDGE
CULVERT (EXIST. & TO CONST.)
SIPHON (EXIST. & TO CONST.)
POWER POLE (EXIST. & PROPOSED)
TEL. & TEL. POLE (EXIST. & PROP.)
IRRIGATION DITCH
LIMIT OF SLOPE LINE — CUT / FILL
SIGN SET BACK CLAUSE
BUILDING SET BACK CLAUSE
JUNK YARD SET BACK CLAUSE

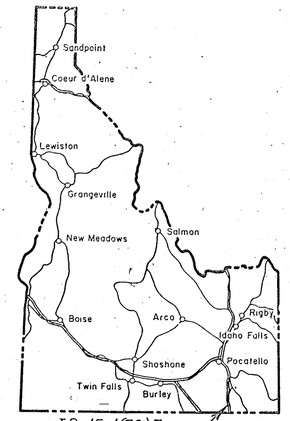

IR-15-1(73)7
Cherry Creek Rest Area
M.P. 7.00
Segment Code 001330

Scale
Varying scales quoted on Plans are for Large plans. Use referenced Graphic Scales for reduced plans.

DESIGN DESIGNATION

ADT 1987	4540	
ADT 1992	5260	
ADT 2012	8120	
DHV 1992	610	11.5%
DHV 2012	920	11.3%
Trucks		
DHV 1992	120	19.7%
DHV 2012	210	22.9%
ADT 1992	1480	28.1%
ADT 2012	2660	32.7%

THE DIMENSIONS SHOWN ON THE PLANS SHALL BE ATTAINED WITHIN THE LIMITS OF PRECISION THAT GOOD CONSTRUCTION PRACTICES WILL PERMIT.

STATE OF IDAHO
REGISTERED PROFESSIONAL ENGINEER
Monte S. Hyde 7416 7/21/89
STATE HIGHWAY ADMINISTRATOR DATE

DEPARTMENT OF TRANSPORTATION
FEDERAL HIGHWAY ADMINISTRATION
APPROVED FOR FEDERAL AID:

DIVISION ADMINISTRATOR DATE

81458

FEDERAL ROAD REGION NO.	STATE	FEDERAL AID PROJECT NO.	TOTAL SHEETS	SHEET NO.
10	IDAHO	IR-15-1(73)77	40-A	1-A

REVISION

DATE	DESCRIPTION	BY

DATE DATE DATE

DESIGNED BY
DRAWN BY
APPROVED

INDEX

REST AREA GRADING PLAN	2-A
REST AREA SITE PLAN	3-A
REST AREA EXTERIOR CONCRETE PLAN	4-A
REST AREA ARBORS	5-A
FOOT BRIDGE PLANS	6-A,7-A,8-A
LANDSCAPING	9-A,10-A,11-A,12-A
REST AREA FOUNDATION PLAN	13-A
REST AREA FLOOR PLAN	14-A
REST AREA ROOF FRAMING PLAN	15-A
REST AREA ELEVATIONS	16-A,17-A
REST AREA SECTIONS	17-A,20-A,21-A,22-A
REST AREA CONCRETE FOUNDATION DETAILS	21-A
REST AREA TRUSS DETAILS	22-A,23-A
REST AREA INTERIOR ELEVATIONS AND DETAILS	24-A,25-A,26-A
REST AREA DOOR AND WINDOW DETAILS	27-A,28-A,29-A,30-A
COLOR SCHEDULE	29-A
REST AREA TILE FLOOR LAYOUT	31-A
RESIDENCE FOUNDATION PLAN	32-A
RESIDENCE FLOOR PLAN	33-A
RESIDENCE ROOF FRAMING PLAN	34-A
RESIDENCE ELEVATIONS	35-A,36-A
RESIDENCE SECTIONS	37-A
RESIDENCE CONCRETE DETAILS	38-A
RESIDENCE DETAILS	39-A
REST AREA PLUMBING	P-1,P-2,P-3
RESIDENTIAL PLUMBING	P-1R
REST AREA HVAC	M-1,M-2
RESIDENTIAL HVAC	M-1R,M-2R
ELECTRICAL	E-1,E-2,E-3,E-4

FEDERAL ROAD REGION NO.	STATE	FEDERAL AID PROJECT NO.	TOTAL SHEETS	SHEET NO.
10	IDAHO	IR-15-1(73)7		

NOTE:
INVERT ELEVATIONS AT CORNERS OF ABSORPTION BEDS ARE PIPE ELEVATIONS IN THAT AREA.

NOTE:
RESEED ABSORPTION BED AREAS WITH NATURAL GRASSES INDIGENOUS TO THE SITE PRIOR TO PUTTING THE SYSTEM IN OPERATION

OBSERVATION PIPE TO BOTTOM OF DRAIN ROCK

10,000 SQ. FT. ALTERNATE ABSORPTION BED (5,000 SQ. FT EACH SECTION)

100'X130' DRAINFIELD REPLACEMENT AREA

(2/P-4) 10,000 SQ. FT ABSORPTION BED (5,000 SQ FT EACH SECTION)

75' MIN. TO DEVELOPMENT PROPERTY LINE

USE 2-45 ELL FITTINGS OR COMBO WYE W/ UNUSED END CAPPED. (TYPICAL)

IE 4588.5

IE 4589.5

IE 4591.5

IE 4594.0

IE 4594.5

IE 4598.5

IE 4599.5

IE 4603.5

IE 4603.68

IE 4603.98

IE 4604.08

IE 4604.5

IE 4604.9

IE 4605.0

IE 4607.0

TEST HOLE #3 260' LT. STA 5+80

TEST HOLE #2 160' LT. STA 5+80

TEST HOLE #1 60' LT. STA 5+80

TEST HOLE #5 100' RT. STA 8+00

TEST HOLE #6 82' RT. STA 16+50

TEST HOLE #7 122' RT. STA 17+00

TEST HOLE #4 150' RT. STA 7+50

DISTRIBUTION BOX (ALL SIM. CONST.) (5/P-4) IE 4594.0

DIVERTER VALVE (4/P-4)

TOP OF MH 4610 ±

10,000 GAL SEPTIC TANK

MANHOLE TOP OF MH 4612.5 ± (3/P-4)

6.25% SLOPE

200' MIN. DRAINFIELD

50' MIN. SEPTIC TANK

MIN. 250' WELL TO DRAINFIELD

FOUND 3/4" PIN (6+20, 42 L) BENCH MARK ELEV. 4605.02

FILL HYDRANT (4/P-3) SEE DETAIL

WELL (P11) (1/P-3)

STOP & WASTE FOR IRRIGATION, SEE DETAIL (5/P-3) (CONFIRM LOC W/ ARCH.) (2')

3" PIPEWAY FOR 2" PIPE TO BE BORED UNDER EXISTING RDWY BY RDWY CONTR. SEPARATE FROM ELECT CROSSING. DEPTH BELOW FROSTLINE. CONFIRM W/ PLUMB. CONTR.

4" INSIDE 6" SLEEVE

BORE UNDER EXIST RDWY. BY RDWY. CONTRACTOR. (SPR-3)

PIPING TO GROUND WATER CLOSED LOOP HEAT PUMP SYSTEM. SEE SHTS. M-1R & M-2R FOR DETAIL.

RESIDENCE FF±4626.50

COTG

CONT'D SHT P-1R

1,000 GAL SEPTIC TANK SEE DETAIL (2/P-1R)

DRAIN FIELD 3-60' LENGTH TRENCHES 3' WIDE = 540 SQ. FT. SEE DETAIL (3/P-1R)

DRAINFIELD REPLACEMENT AREA

DISTRIBUTION BOX SIMILAR TO DETAIL (5/P-4)

COTG IE 4608.0 CONT'D SHT P-2

VISITOR'S CENTER FF 4612.00

DRINKING FOUNTAIN 3/4" SEE SHT P-2 (P6)

PIPING TO GROUND WATER CLOSED LOOP HEAT PUMP SYSTEM. SEE SHTS. M-1 & M-2 FOR DETAIL & DIMENSIONS.

THRUST BLOCKS (TYP) SEE DETAIL (1/P-2)

2"CU

4"

6"(TYP)

3"(TYP)

100' (TYP)

1% SLOPE

4590 4595 4600 4605 4610 4615 4620 4625 4630 4635

1. CONFIRM THE EXACT LOCATION OF ALL EQUIPMENT PRIOR TO MAKING PLUMBING ROUGH-IN.
2. ALL WATER LINES OUTSIDE OF THE BUILDING STRUCTURE SHALL BE A MINIMUM OF SIX INCHES BEOLW THE FROSTLINE. (6' MIN.)
3. CONFIRM THE EXACT LOCATION WHERE SEWER AND WATER LINES LEAVE THE BUILDING.
4. THE PLUMBING CONTRACTOR SHALL INSTALL WATER PIPING ABOVE THE CEILING SUCH THAT THE PIPING WILL BE BETWEEN THE BUILDING INSULATION AND THE CEILING TO PREVENT FREEZING.
5. THE TERM "ROUGH-IN" INCLUDES AT PROPOSED FIXTURE LOCATIONS
   1) SHUT-OFF VALVES OR STOPS AT HOT AND COLD WATER STUB OUTS.
   2) VENT PIPE THRU ROOF OR CONNECTED TO VENT SYSTEM.
   3) DRAIN LINE, TRAPPED AND VENTED, STUBBED THRU WALL, OR FLOOR, AND CAPPED.
6. ANY PENETRATIONS THRU OR TRENCHES IN EXISTING OR PRE-FABRICATED CONCRETE FLOORS OR PARTITIONS SHALL BE SAW CUT OR CORE DRILLED.
7. ANY PENETRATIONS THRU FIRE RATED PARTITIONS SHALL BE SEALED WITH SCOTCH-3M #FS195 WRAP AND #CP25 CAULK AS PER MANUFACTURER'S RECOMMENDATIONS.
8. THE PLUMBING CONTRACTOR SHALL NOT INSTALL EXPOSED PIPING ABOVE OR WITHIN THE CODE REQUIRED WORKING CLEARANCES OF ANY ELECTRICAL PANELBOARD OR SWITCHGEAR (30" WIDE OR THE WIDTH OF THE PANEL, WHICHEVER IS GREATER AND 36" IN FRONT-FLOOR TO CEILING). COORDINATE WITH ELECTRICAL CONTRACTOR.
9. PLUMBING CONTR. SHALL INSTALL & MAKE ALL FINAL CONNECTIONS TO OWNER SUPPLIED EQUIPMENT REQUIRING PLUMBING CONNECTIONS.
10. ANY WATER LINES LOCATED IN OR NEAR OUTSIDE WALLS SHALL BE RUN BETWEEN WARM SIDE OF THE WALL AND BUILDING INSULATION TO HELP PREVENT FREEZING OF LINES.

GENERAL NOTES TO ALL SHEETS

REGISTERED PROFESSIONAL ENGINEER 1266 State of Idaho Arthur H. Nielson, Jr.

NORTH

0 50' 100' 200'
SCALE IN FEET

REVISIONS		
DATE	DESCRIPTION	BY

DESIGNED BY	DRF & CDH	DATE 4-14-89
DRAWN BY	CDH	DATE 4-14-89
APPROVED		DATE

OWNERSHIP OF DOCUMENTS
This document and the ideas and designs incorporated herein, as an instrument of professional service, is the property of NIELSON ENGINEERING, INC. and is not to be used, in whole or in part, for any other project without the written authorization of an authorized representitive of NIELSON ENGINEERING, INC.
Unauthorized use will be prosecuted to the fullest extent of the Law.
Copyright © 1989 by: NIELSON ENGINEERING, INC.

sheet title: PLUMBING SITE PLAN
project: CHERRY CREEK REST AREA
revised:
sheet: P-1 of 4

Nielson Engineering, Inc.
Consulting Engineers
120 North Twelfth Avenue Pocatello, Idaho 83201 (208)232-2577

date 4-14-89 job no. P-8912

FEDERAL ROAD REGION NO.	STATE	FEDERAL AID PROJECT NO.	TOTAL SHEETS	SHEET NO.
10	IDAHO	IR-15-1(73)7	40A	10-A

DATE	DESCRIPTION	BY

DESIGNED BY
DRAWN BY
APPROVED

DATE DATE DATE

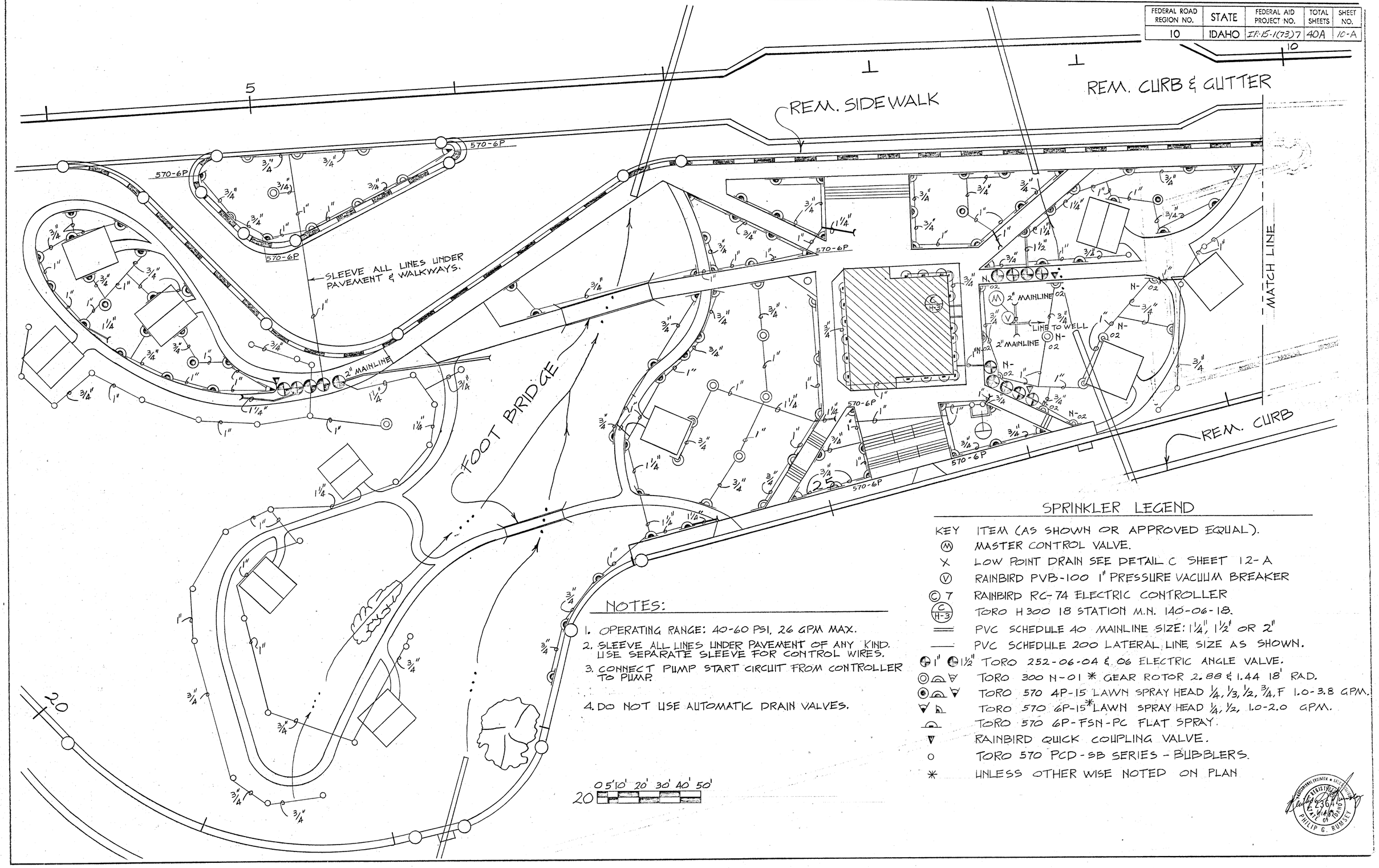

NOTES:

1. OPERATING RANGE: 40-60 PSI, 26 GPM MAX.
2. SLEEVE ALL LINES UNDER PAVEMENT OF ANY KIND. USE SEPARATE SLEEVE FOR CONTROL WIRES.
3. CONNECT PUMP START CIRCUIT FROM CONTROLLER TO PUMP.
4. DO NOT USE AUTOMATIC DRAIN VALVES.

SPRINKLER LEGEND

KEY	ITEM (AS SHOWN OR APPROVED EQUAL).
Ⓜ	MASTER CONTROL VALVE.
X	LOW POINT DRAIN SEE DETAIL C SHEET 12-A
Ⓥ	RAINBIRD PVB-100 1" PRESSURE VACUUM BREAKER
Ⓒ 7	RAINBIRD RC-74 ELECTRIC CONTROLLER
C H-3	TORO H 300 18 STATION M.N. 140-06-18.
═══	PVC SCHEDULE 40 MAINLINE SIZE: 1¼", 1½" OR 2"
———	PVC SCHEDULE 200 LATERAL LINE SIZE AS SHOWN.
1" 1½"	TORO 252-06-04 & 06 ELECTRIC ANGLE VALVE.
	TORO 300 N-01 * GEAR ROTOR 2.88 & 1.44 18' RAD.
	TORO 570 4P-15 LAWN SPRAY HEAD ¼, ⅓, ½, ¾, F 1.0-3.8 GPM.
	TORO 570 6P-15* LAWN SPRAY HEAD ¼, ½, 1.0-2.0 GPM.
	TORO 570 6P-FSN-PC FLAT SPRAY.
▽	RAINBIRD QUICK COUPLING VALVE.
o	TORO 570 PCD-SB SERIES - BUBBLERS.
*	UNLESS OTHER WISE NOTED ON PLAN

PROFESSIONAL ENGINEER & LICENSED REGISTRATION 2364 STATE OF IDAHO PHILIP G. RUMSEY

FEDERAL ROAD REGION NO.	STATE	FEDERAL AID PROJECT NO.	TOTAL SHEETS	SHEET NO.
10	IDAHO	IR-15-1(73)7	40A	11-A

REVISION

DATE	DESCRIPTION	BY

DESIGNED BY
DRAWN BY
APPROVED

DATE DATE DATE

REST AREA LANDSCAPING & SPRINKLER SYSTEM PLAN

SCALE: 1" = 20'-0"

20 0 5' 10' 20' 30' 40' 50'

3/4" 0 3' 6" 9" 1' 2' 3'

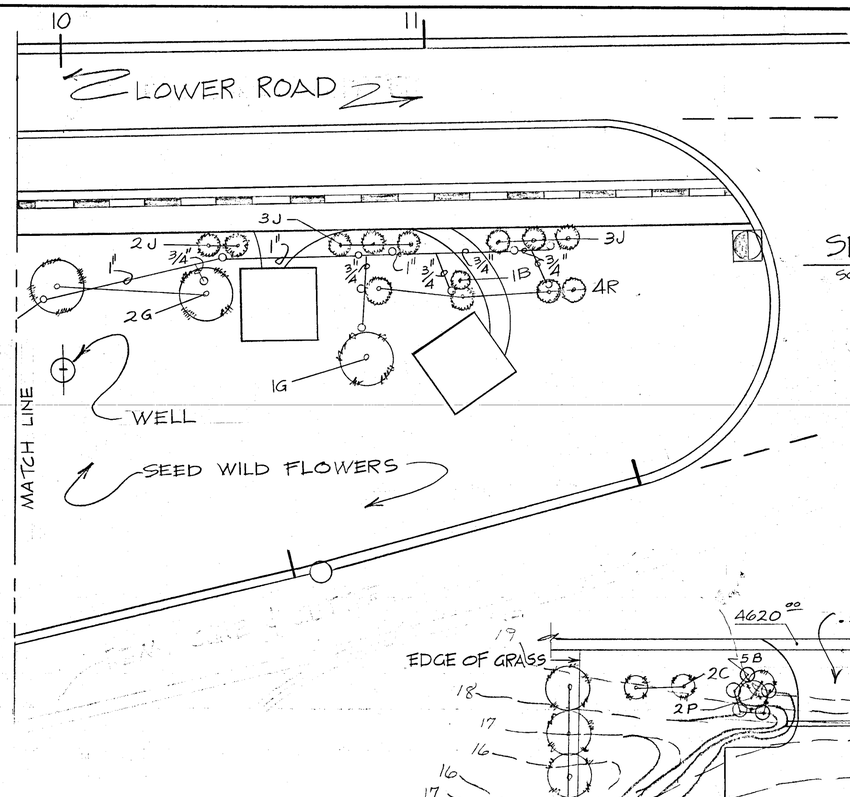

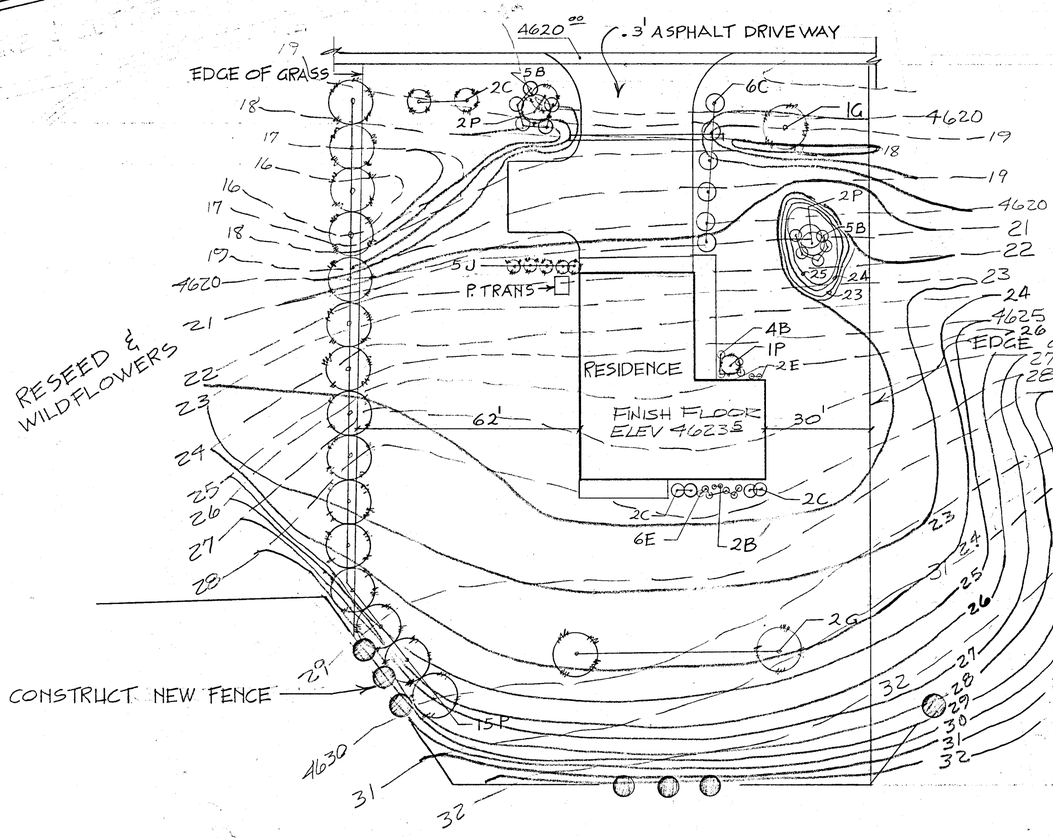

GRADING & LANDSCAPING PLAN

SCALE: 1" = 20'-0"

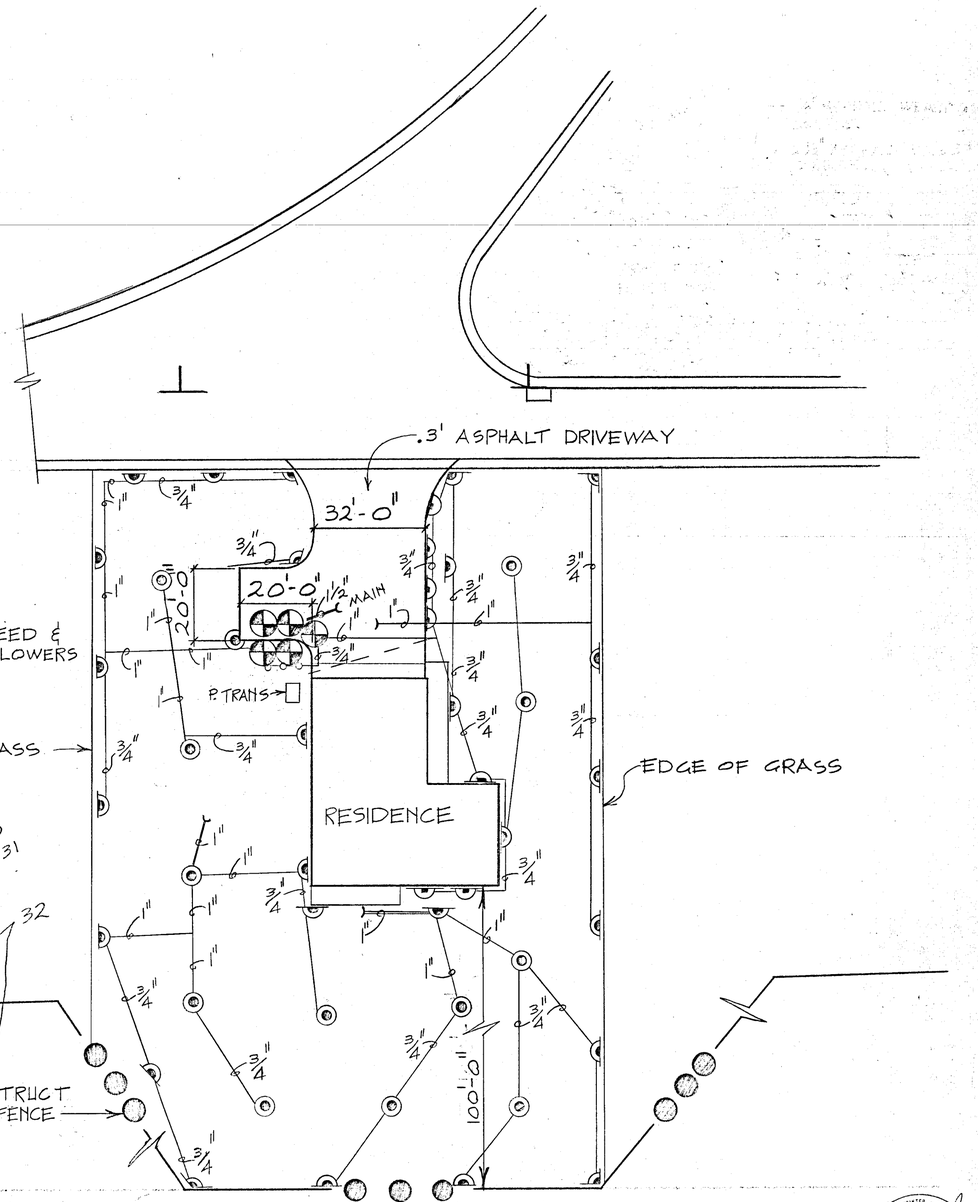

SPRINKLER SYSTEM PLAN

SCALE: 1" = 20'-0"

PHILIP G. RUMSEY

FEDERAL ROAD REGION NO.	STATE	FEDERAL AID PROJECT NO.	TOTAL SHEETS	SHEET NO.
10	IDAHO	IR-15-1(73)7	40 A	12-A

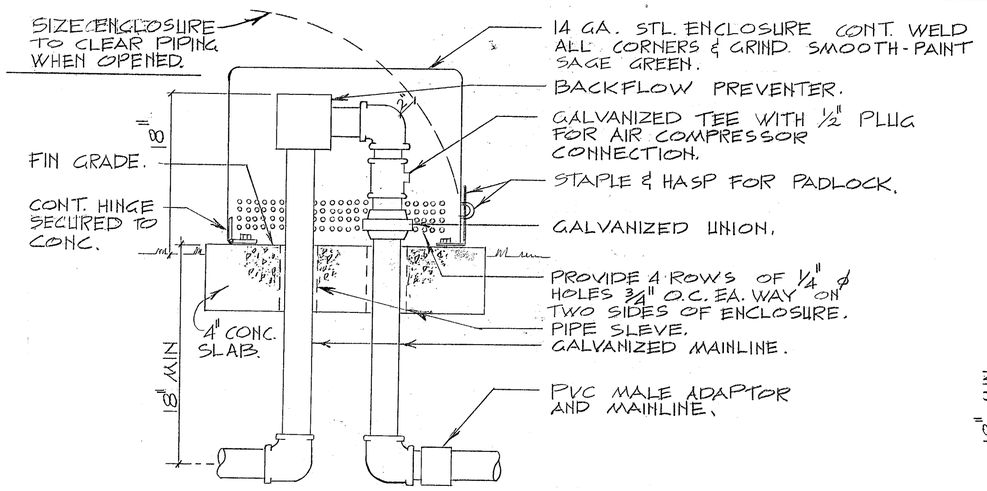

ENCLOSURE FOR BACKFLOW PREVENTER DETAIL (A / 12-A)

NO SCALE:

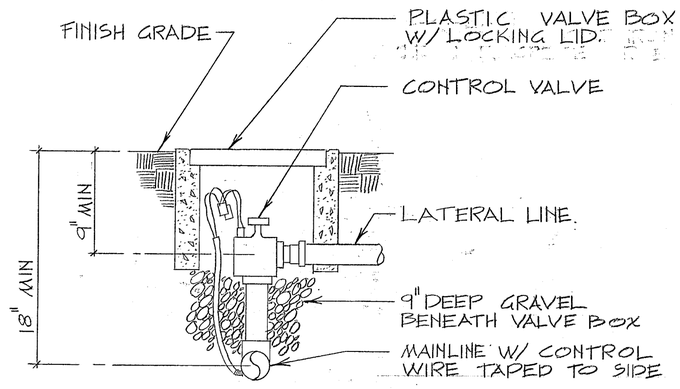

CONTROL VALVE DETAIL TYP.

NO SCALE:

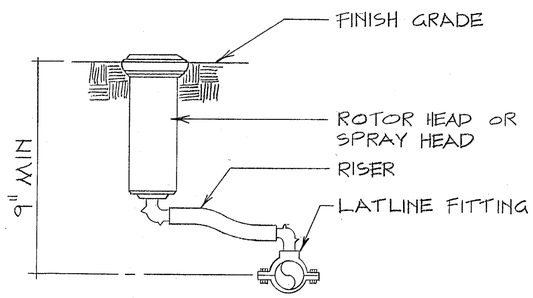

HEAD DETAIL, TYP

NO SCALE:

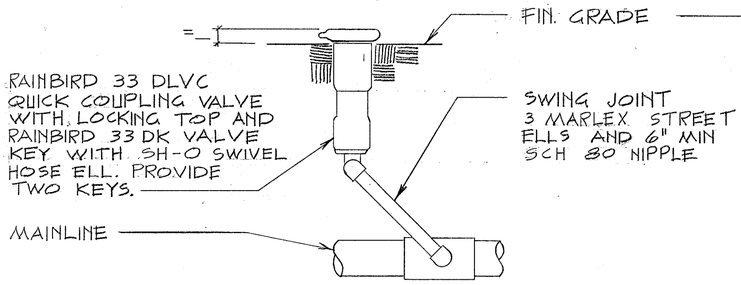

QUICK COUPLING VALVE DETAIL TYP. (B / 12-A)

NO SCALE:

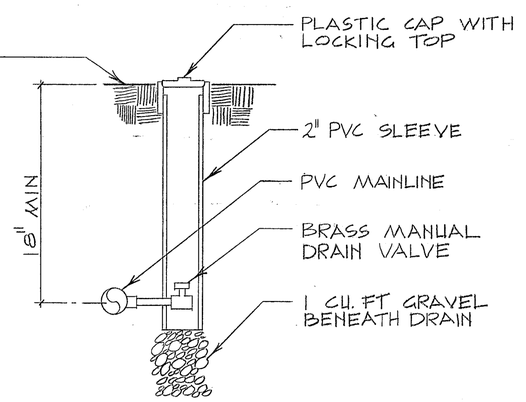

DRAIN VALVE DETAIL TYP. (C / 12-A)

NO SCALE:

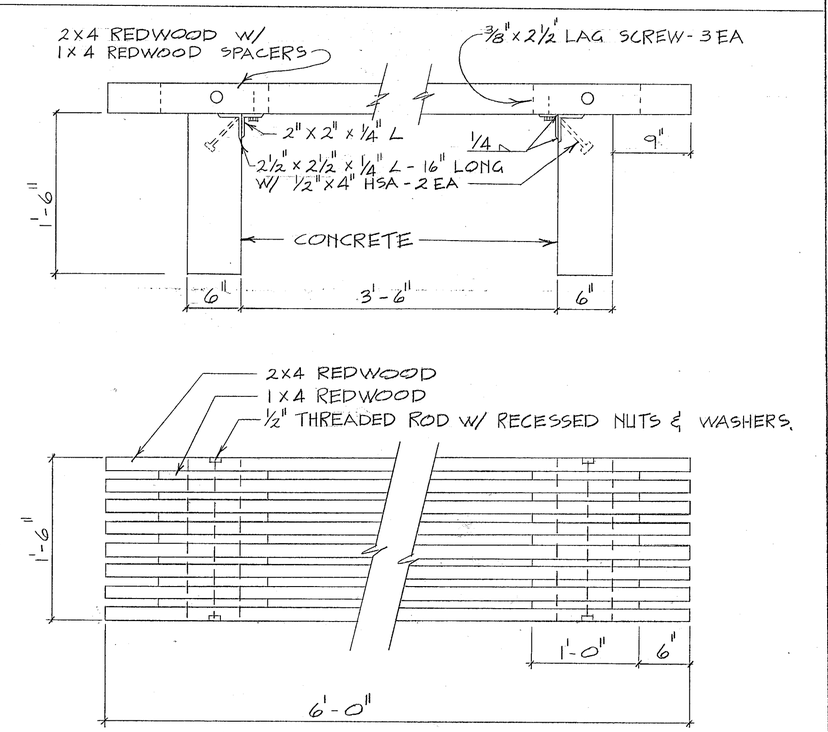

BENCH DETAIL (1 / 12-A)

SCALE: 1 1/2" = 1'-0"

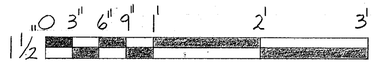

REVISION

DATE	DESCRIPTION	BY

DESIGNED BY ____ DATE ____

DRAWN BY ____ DATE ____

APPROVED ____ DATE ____

81458

FEDERAL ROAD REGION NO.	STATE	FEDERAL AID PROJECT NO.	TOTAL SHEETS	SHEET NO.
10	IDAHO	IR-15-1(73)7	40A	32-A

REVISION

DATE	DESCRIPTION	BY

DESIGNED BY
DRAWN BY
APPROVED

DATE
DATE
DATE

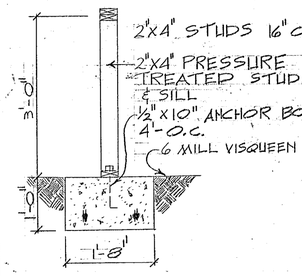

FOOTING & PONY WALL (2 / 32-A)
SCALE ¾"=1'-0"

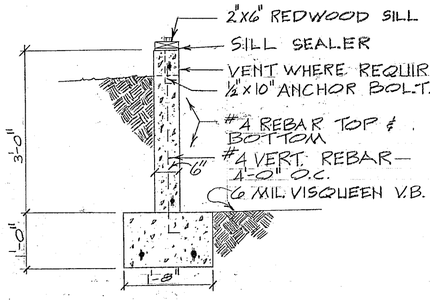

FOUNDATION & FOOTING (1 / 32-A)
SCALE ¾"=1'-0"

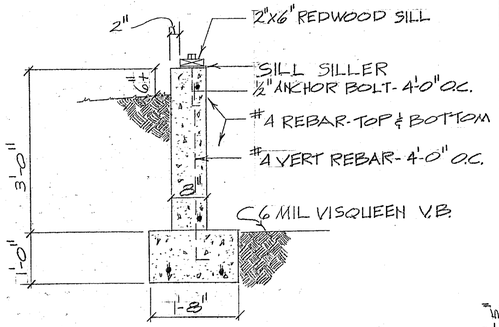

FOUNDATION & FOOTING (3 / 32-A)
SCALE ¾"=1'-0"

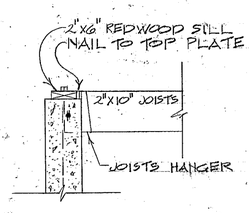

JOISTS DETAIL (4 / 32-A)
SCALE ¾"=1'-0"

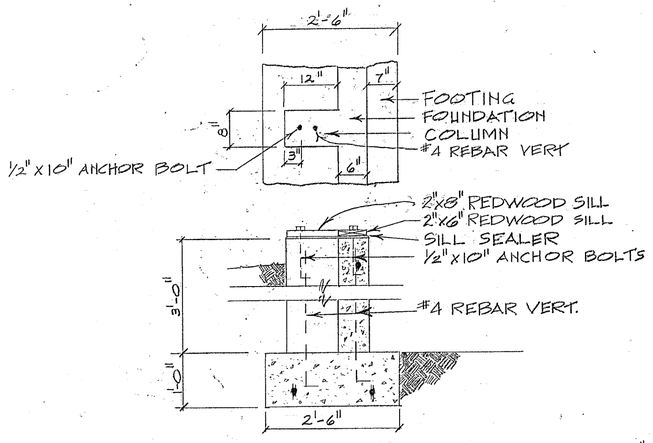

FOUNDATION COLUMN DETAIL (5 / 32-A)
SCALE ¾"=1'-0"

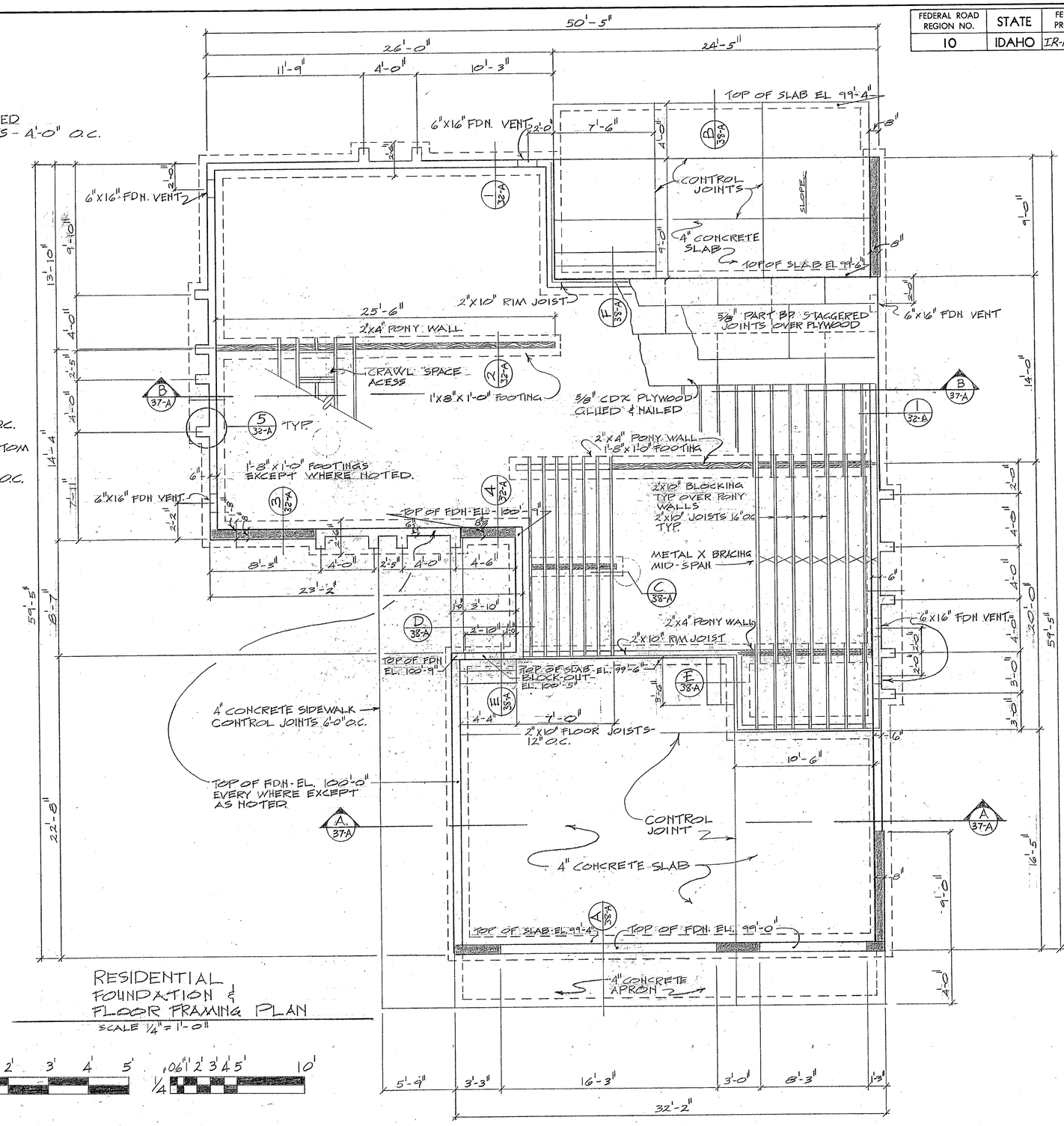

RESIDENTIAL FOUNDATION & FLOOR FRAMING PLAN
SCALE ¼"=1'-0"

3/4" 0 3" 6" 9" 1' 2' 3' 4' 5'
1/4" 0 6" 1' 2' 3' 4' 5' 10'



FEDERAL ROAD REGION NO.	STATE	FEDERAL AID PROJECT NO.	TOTAL SHEETS	SHEET NO.
10	IDAHO	IR-15-1(73)7	40A	33-A

REVISION

DATE	DESCRIPTION	BY

DESIGNED BY
DRAWN BY
APPROVED

DATE DATE DATE

ROOM FINISH SCHEDULE

ROOM #	FLOOR: VINYL SHEET FL.	FLOOR: CONCRETE	FLOOR: CERAMIC TILE	FLOOR: CARPET	BASE: WOODBASE	BASE: RUBBER	WALLS: ½" DRYWALL	WALLS: ½" DRYWALL FIRE TAPE	WALLS: ⅝" DRYWALL FIRE TAPE	WALLS: ½" DRYWALL, PAPER	CEILING: ½" DRYWALL	CEILING: ⅝" DRYWALL FIRE TAPE	REMARKS
10				●	●		●				●		
11	●				●		●			●	●		
12	●				●		●			●	●		
13				●	●		●				●		ENCLOSURER
14				●	●		●				●		
15				●	●		●				●		PARTITION CEDAR PANEL
16	●				●		●				●		WALL AROUND CABINETS TILE
17				●	●		●				●		
18	●					●	●				●		
19			●		●		●				●		
20		●						●				●	
21		●						●				●	

DOOR SCHEDULE (SIZE NOTED ON PLAN)

① INSULATED METAL DOOR, 1½ PR. HINGES, KEYED LOCKSET, DEAD BOLT, BASE STOP, WEATHERSTRIP, ALUMINUM THRESHOLD DET. D/ JAMB DET. 12/ W/ SIDE LIGHT

② SOLID CORE WOOD, 1½ PR. HINGES, KEYED LOCKSET, BASE STOP, WEATHERSTRIP, ALUM. THRESHOLD, JAMB DET. 9/

③ INSULATED METAL DOOR, 1½ PR. HINGES, KEYED LOCKSET, JAMB DET. 10/

④ SLIDING GLASS DOOR, KEYED LOCKSET, SCREEN, THRESHOLD DET. 1/

⑤ HOLLOW CORE WOOD DOOR, 1 PR. HINGES, PRIVACY LOCKSET, BASE STOP.

⑥ HOLLOW CORE WOOD DOOR, 1 PR. HINGES, PASSAGE LATCHSET, BASE STOP

⑦ WOOD BI-FOLD DOOR, COMPLETE PIVOT BI-FOLDING DOOR HARDWARE; INCLUDING HINGES & DOOR PULL, JAMB DET.

⑧ ROUGH SAWN FLUSH METAL OVERHEAD DOOR, KEYED LOCK, JAMB DET 11/

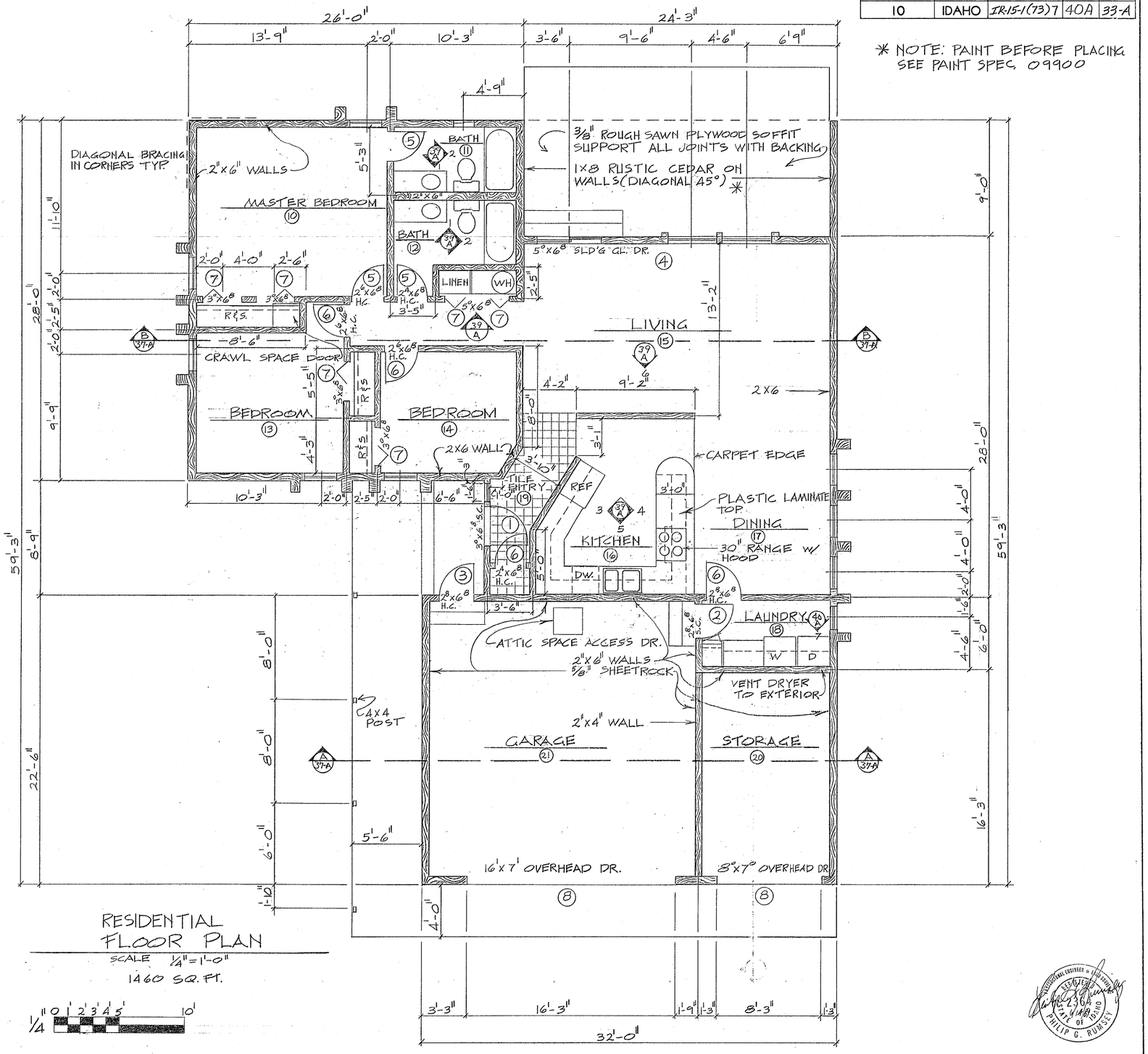

RESIDENTIAL FLOOR PLAN

SCALE ¼"=1'-0"

1460 SQ. FT.

¼" 0 1' 2' 3' 4' 5' 10'

81458

FEDERAL ROAD REGION NO.	STATE	FEDERAL AID PROJECT NO.	TOTAL SHEETS	SHEET NO.
10	IDAHO	IR-15-1(73)7	40A	34-A

REVISION

DATE	DESCRIPTION	BY

DESIGNED BY
DRAWN BY
APPROVED
DATE
DATE
DATE

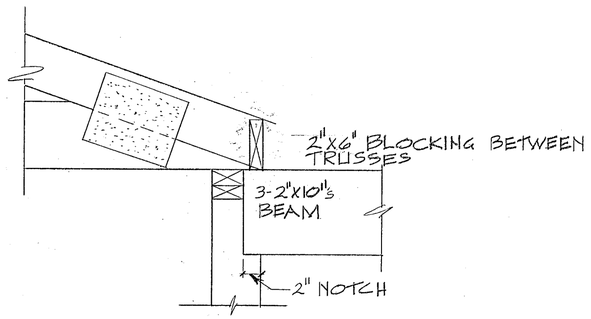

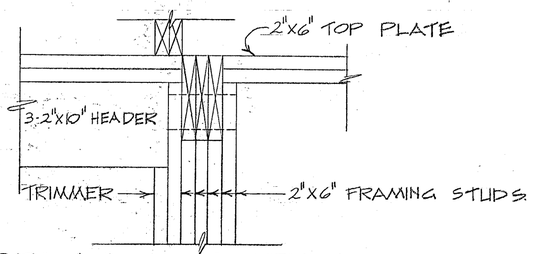

BEAM DETAIL
SCALE: 1½" = 1'-0"
1 / 34-A

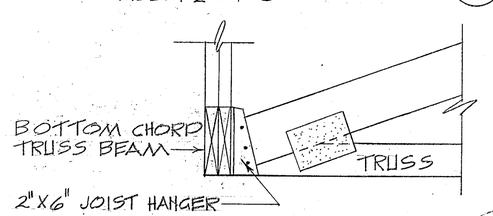

TRUSS BEAM DETAIL
SCALE: 1½" = 1'-0"
2 / 34-A

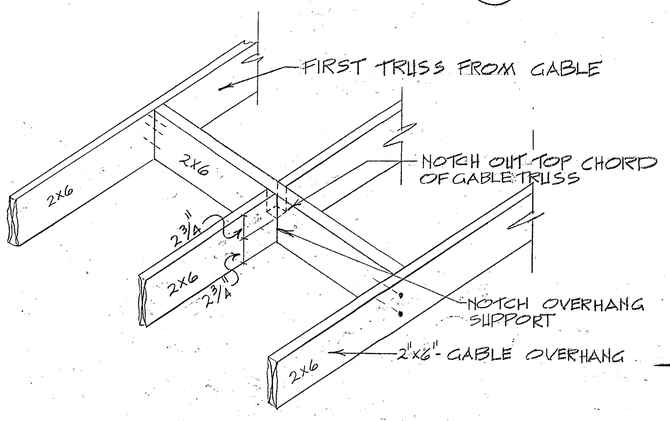

OVERHANG DETAIL
SCALE: 1½" = 1'-0"
3 / 34-A

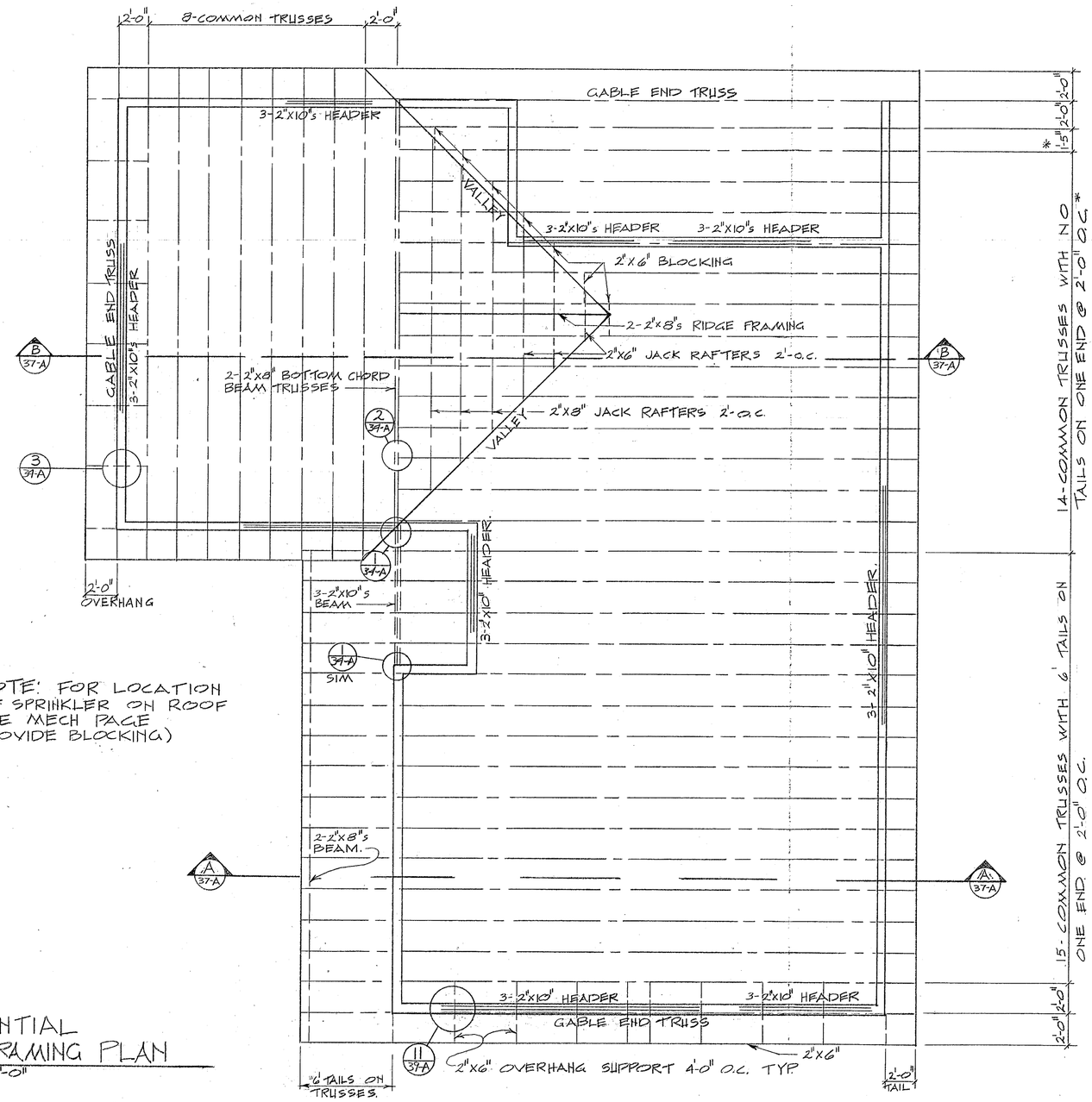

HOTE: FOR LOCATION OF SPRINKLER ON ROOF SEE MECH PAGE (PROVIDE BLOCKING)

RESIDENTIAL ROOF FRAMING PLAN
SCALE ¼" = 1'-0"

1½" 0 1 2 3 6" 1' 2'

¼" 0 6 1' 2' 3' 4' 5' 10'



FEDERAL ROAD REGION NO.	STATE	FEDERAL AID PROJECT NO.	TOTAL SHEETS	SHEET NO.
10	IDAHO	IR-15-1(73)7	40A	35-A

REVISION

DATE	DESCRIPTION	BY

DESIGNED BY
DRAWN BY
APPROVED

DATE DATE DATE

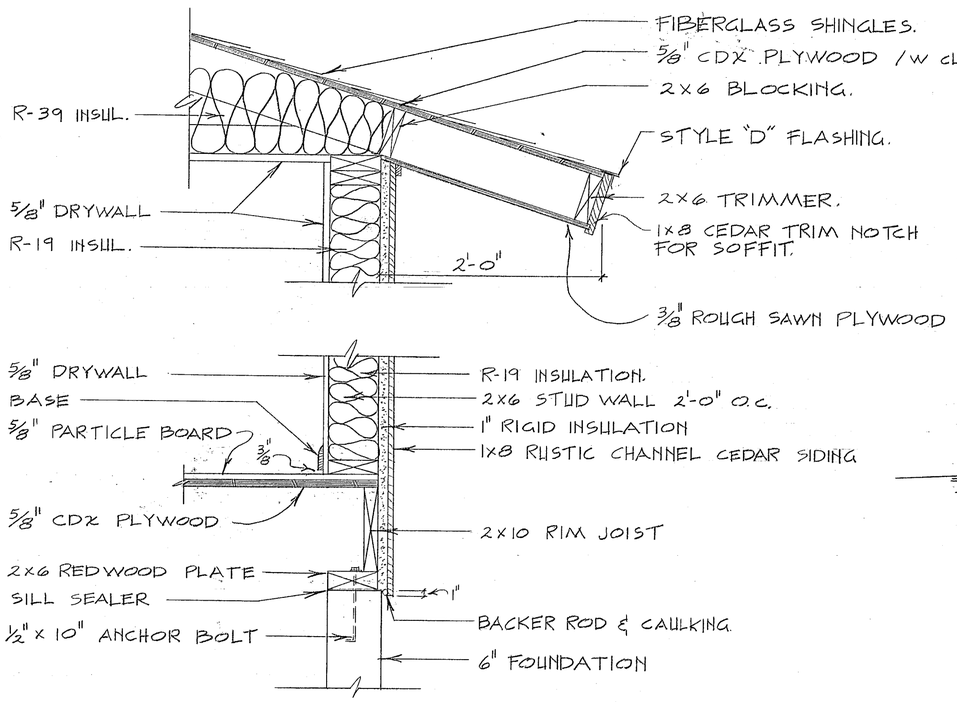

WALL SECTION (CEDAR)

SCALE: 1½" = 1'-0"

1 / 35-A

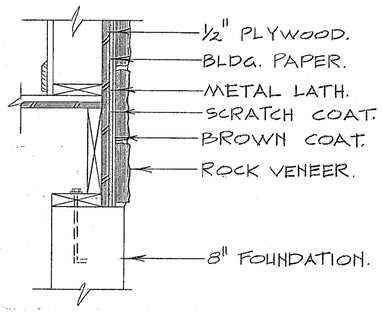

WALL SECTION (ROCK)

SCALE: 1½" = 1'-0"

2 / 35-A

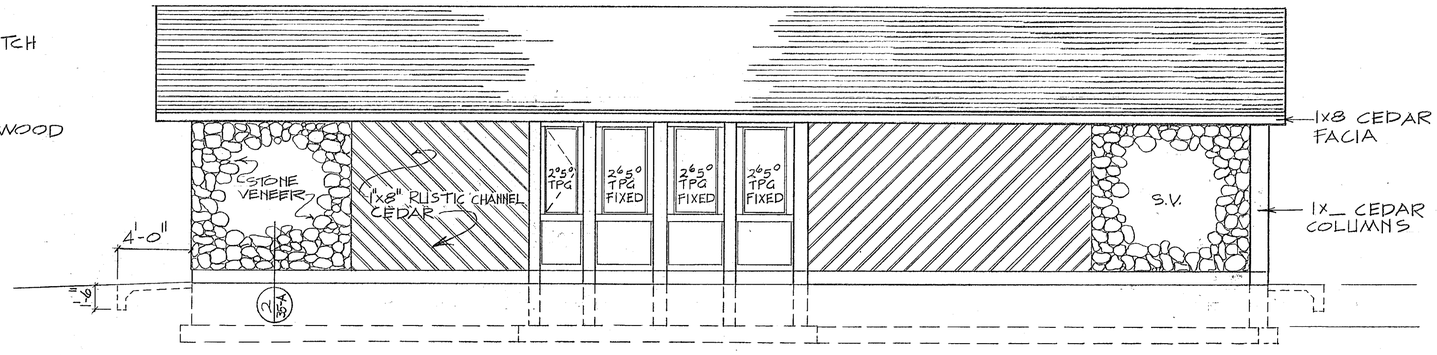

RIGHT ELEVATION

SCALE: ¼" = 1'-0"

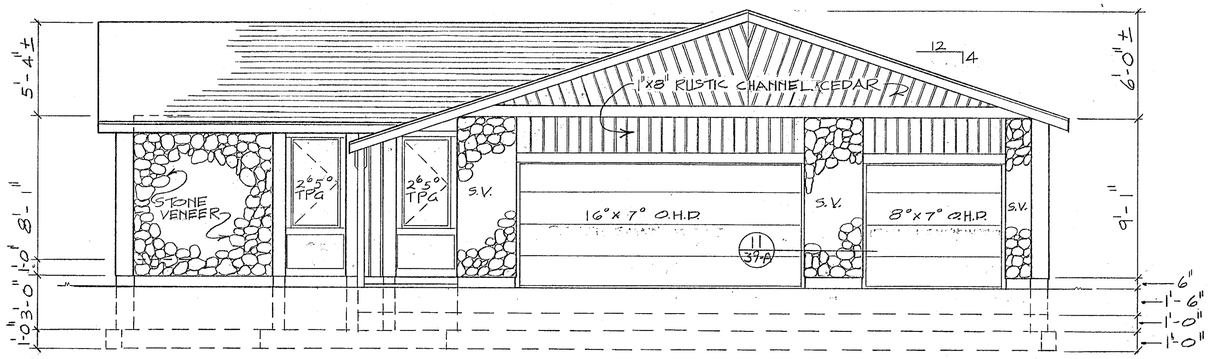

FRONT ELEVATION

SCALE: ¼" = 1'-0"

1/4" 0 6" 1' 2' 3' 4' 5' 10'



81458

FEDERAL ROAD REGION NO.	STATE	FEDERAL AID PROJECT NO.	TOTAL SHEETS	SHEET NO.
10	IDAHO	IR-15-1(73)7	40A	36-A

DATE	DESCRIPTION	BY

DESIGNED BY
DRAWN BY
APPROVED

DATE
DATE
DATE

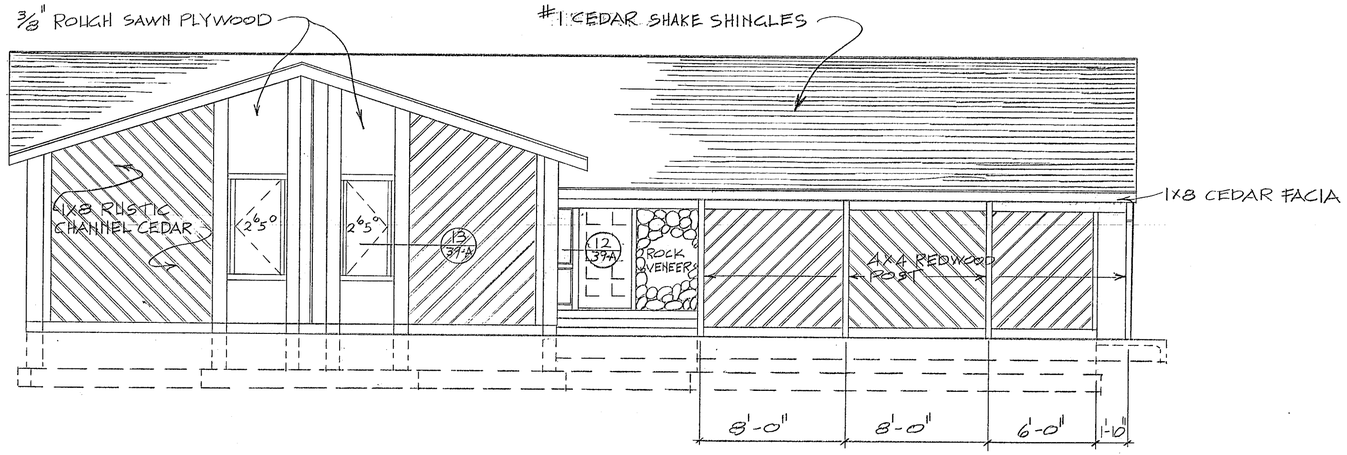

LEFT ELEVATION
SCALE: 1/4" = 1'-0"

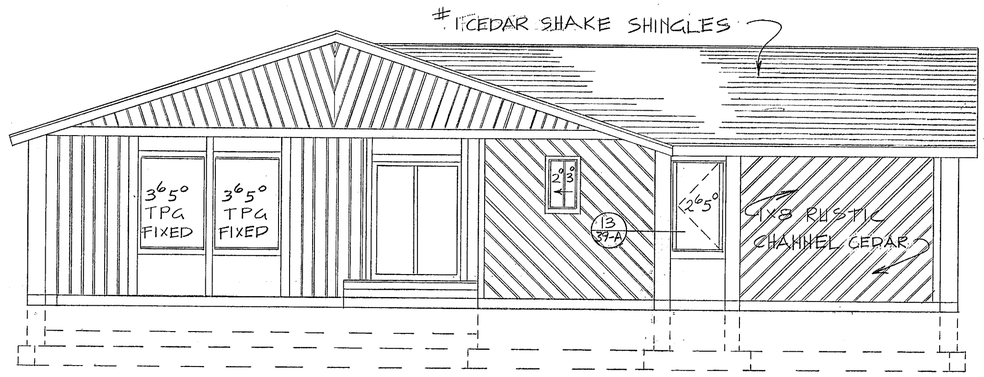

REAR ELEVATION
SCALE: 1/4" = 1'-0"

1/4" 0 6" 1' 2' 3' 4' 5' 10'

REGISTERED PROFESSIONAL ENGINEER
PHILIP G. RUMSEY
STATE OF IDAHO
6/4/98

81458

FEDERAL ROAD REGION NO.	STATE	FEDERAL AID PROJECT NO.	TOTAL SHEETS	SHEET NO.
10	IDAHO	IR-15-1(73)7	40A	37-A

DATE	DESCRIPTION	BY

DATE DATE DATE

DESIGNED BY
DRAWN BY
APPROVED

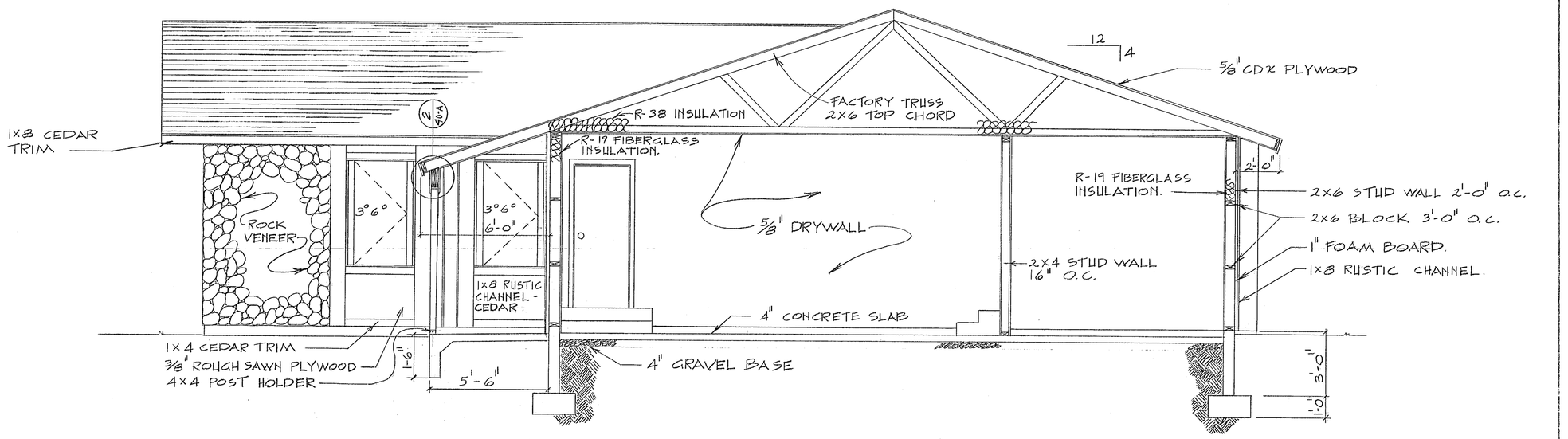

SECTION A-A

SCALE: 3/8" = 1'-0"

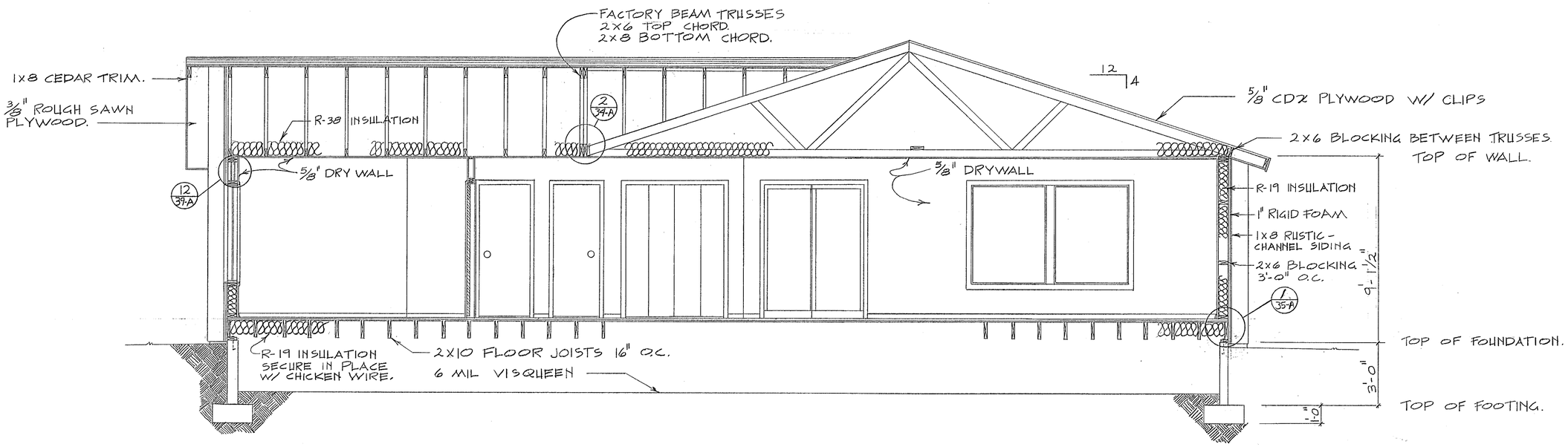

SECTION B-B

SCALE: 3/8" = 1'-0"

PROFESSIONAL ENGINEER & LAND SURVEYOR
REGISTERED
STATE OF IDAHO
PHILLIP G. RUMSEY

FEDERAL ROAD REGION NO.	STATE	FEDERAL AID PROJECT NO.	TOTAL SHEETS	SHEET NO.
10	IDAHO	IR-15-1(73)7	40A	38-A

REVISION		
DATE	DESCRIPTION	BY

DESIGNED BY
DRAWN BY
APPROVED
DATE
DATE
DATE

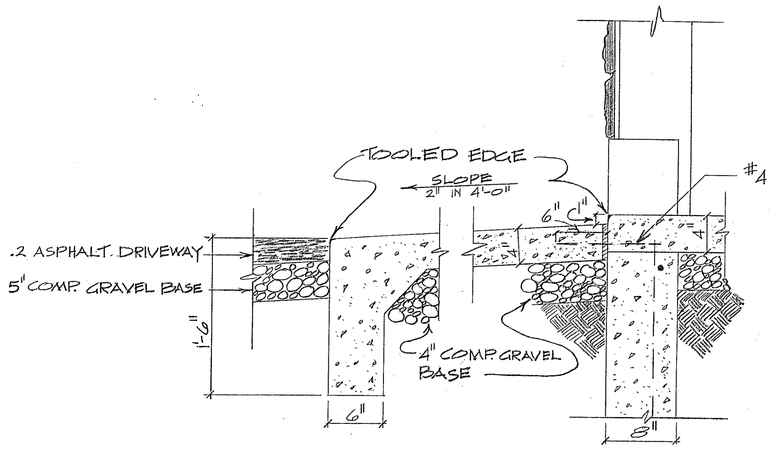

CONCRETE APRON DETAIL
SCALE: 1½"=1'-0"
A 38-A

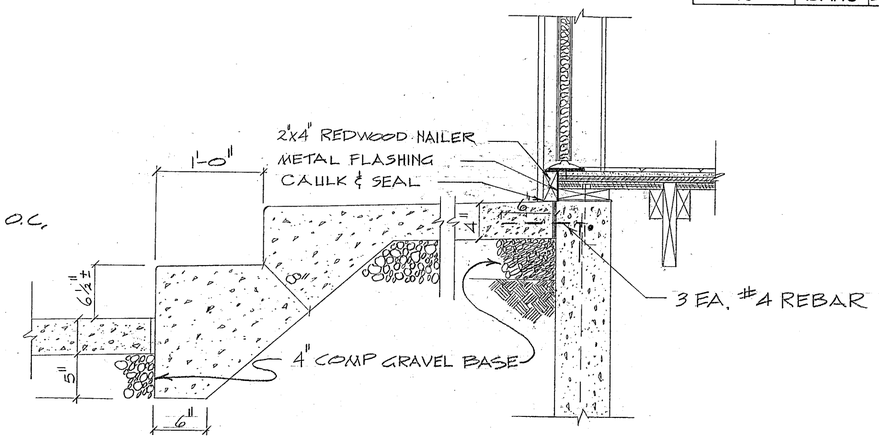

FRONT STEPS DETAL
SCALE: 1½"=1'-0"
D 38-A

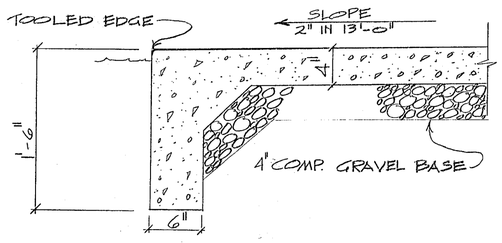

CONCRETE PATIO DETAIL
SCALE: 1½"=1'-0"
B 38-A

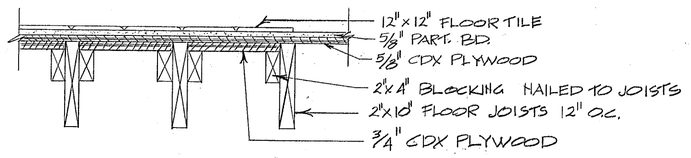

FLOOR DETAIL @ TILE
SCALE: 1½"=1'-0"
C 38-A

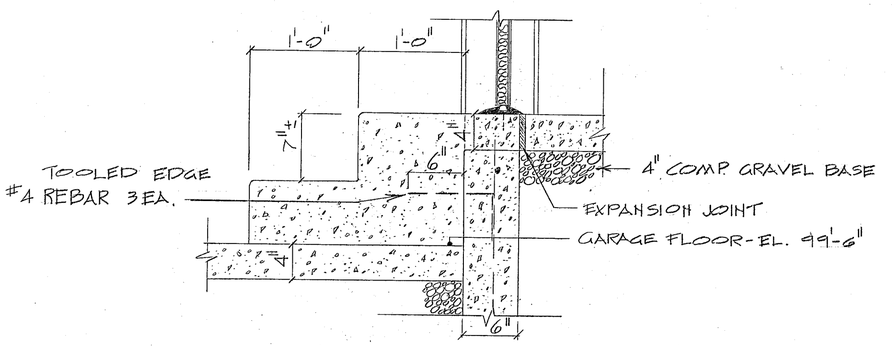

GARAGE STEP DETAIL
SCALE: 1½"=1'-0"
E 38-A

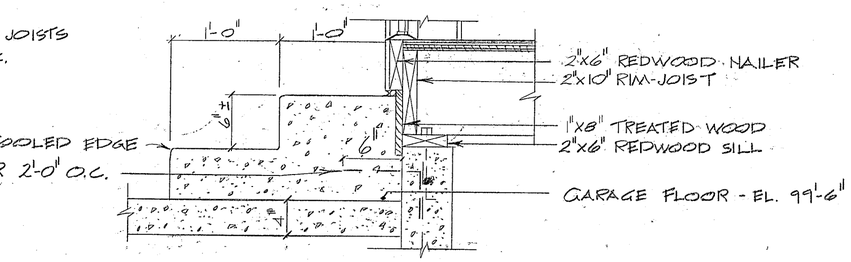

STEP DETAIL
SCALE: 1½"=1'-0"
F 38-A

0 1" 2" 3" 6" 1' 2'
1½"

REGISTERED PROFESSIONAL ENGINEER
STATE OF IDAHO
PHILIP G. RUMSEY

FEDERAL ROAD REGION NO.	STATE	FEDERAL AID PROJECT NO.	TOTAL SHEETS	SHEET NO.
10	IDAHO	IR-15-1(73)7	40A	39-A

NO.	DESCRIPTION	DATE	BY

DESIGNED BY
DRAWN BY
APPROVED
DATE
DATE
DATE

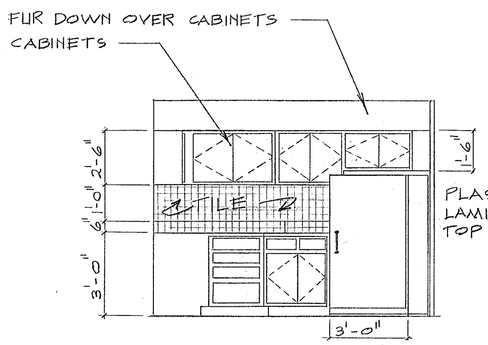

ELEVATION 3
SCALE: 3/8" = 1'-0"
39-A

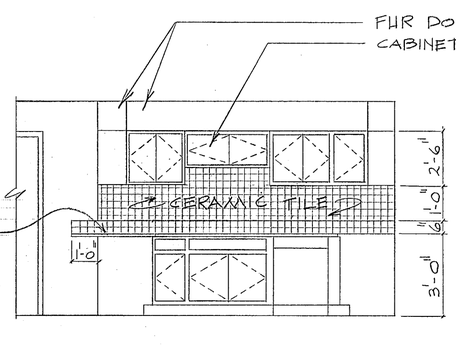

ELEVATION 5
SCALE: 3/8" = 1'-0"
39-A

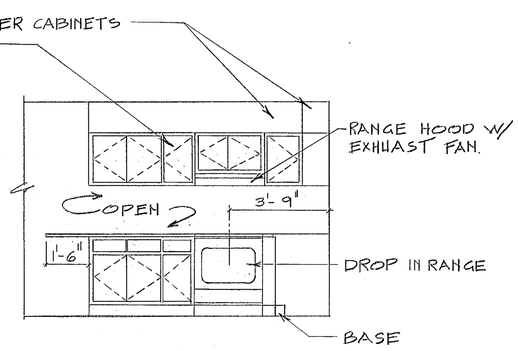

ELEVATION 4
SCALE: 3/8" = 1'-0"
39-A

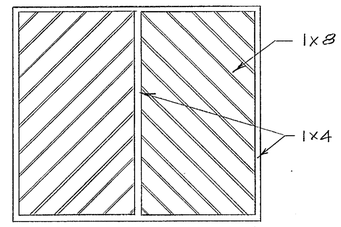

ELEVATION 6
SCALE: 3/8" = 1'-0"
39-A

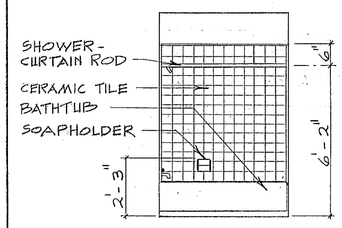

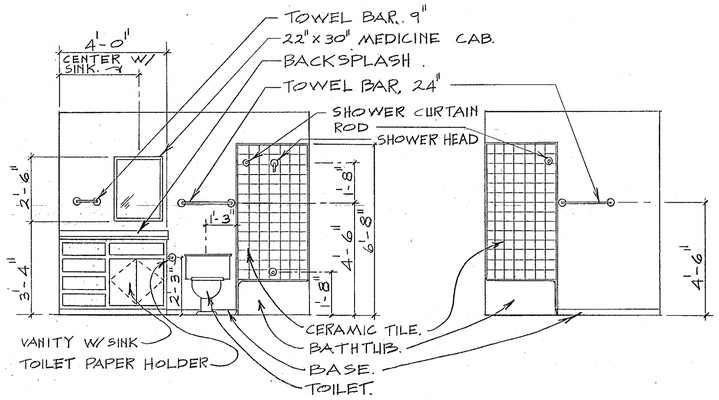

ELEVATION 2
SCALE: 3/8" = 1'-0"
39-A

ELEVATION 1
SCALE: 3/8" = 1'-0"
39-A

ELEVATION
SCALE: 3/8" = 1'-0"

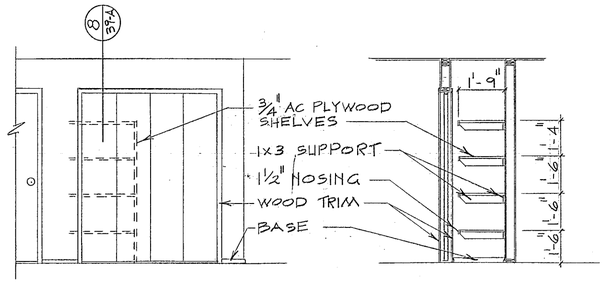

LINEN CLOSET 7
SCALE: 3/8" = 1'-0"
39-A

SECTION 8
SCALE: 3/8" = 1'-0"
39-A

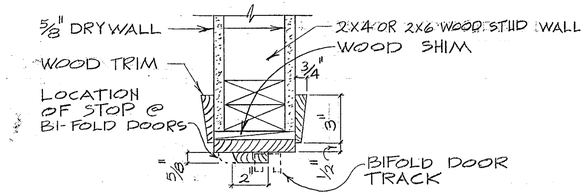

DOOR JAMB DETAIL 9
SCALE: 3" = 1'-0"
39-A

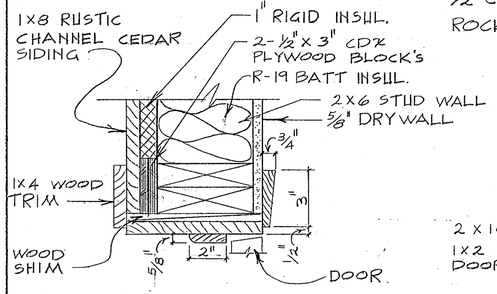

EXT. DOOR JAMB DETAIL 10
SCALE: 3" = 1'-0"
39-A

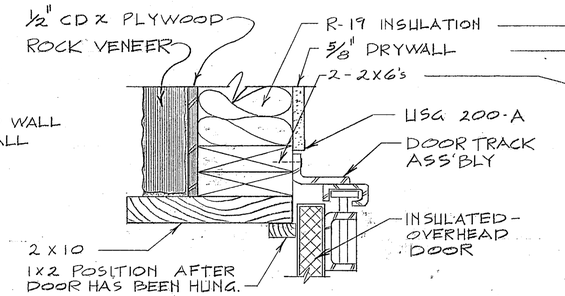

OVERHEAD DOOR JAMB 11
SCALE: 3" = 1'-0"
39-A

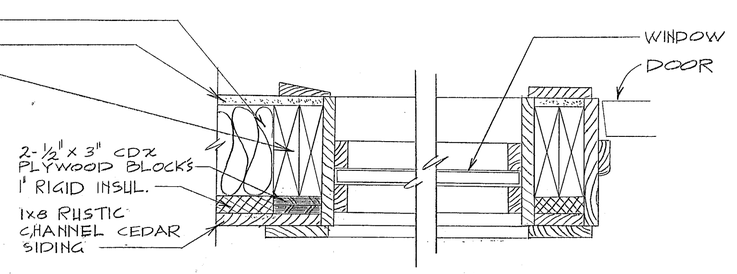

DOOR/WINDOW JAMB DETAIL 12
SCALE: 3" = 1'-0"
39-A

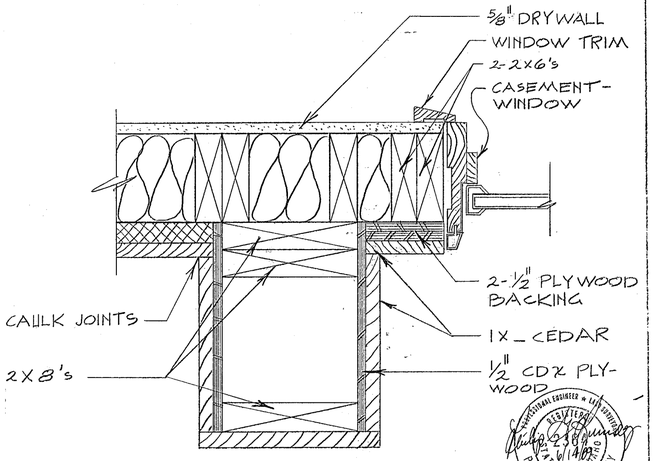

COLUMN & WINDOW JAMB DETAIL 13
SCALE: 3" = 1'-0"
39-A

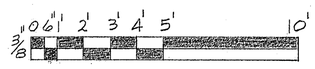



81488

FEDERAL ROAD REGION NO.	STATE	FEDERAL AID PROJECT NO.	TOTAL SHEETS	SHEET NO.
10	IDAHO	IR-15-1(73)7	40A	40-A

REVISION | DESCRIPTION | BY | DATE

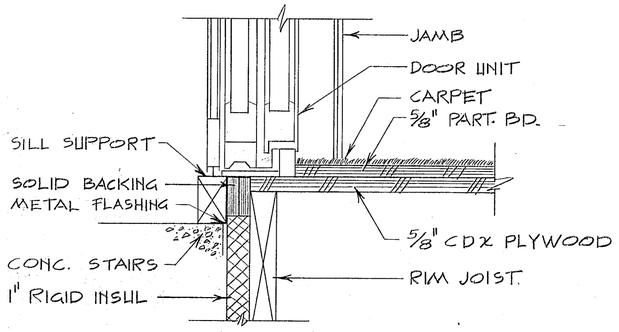

SILL @ SLIDING DOOR — 1 / 40-A

SCALE: 3" = 1'-0"

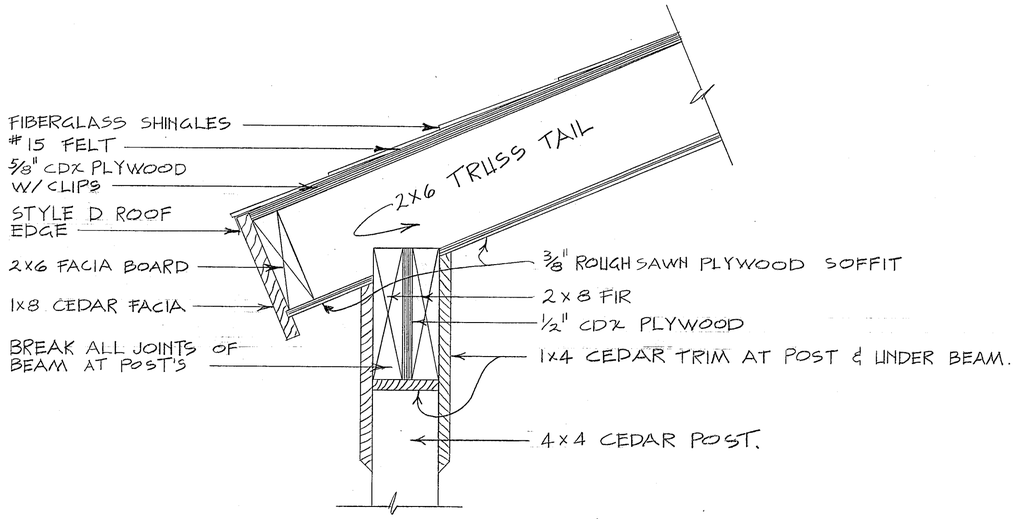

BEAM DETAIL — 2 / 40-A

SCALE: 3"=1'-0"

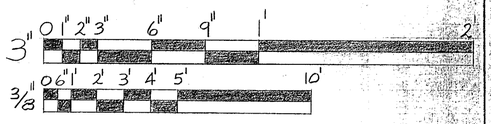

DESIGNED BY | DRAWN BY | APPROVED | DATE | DATE | DATE

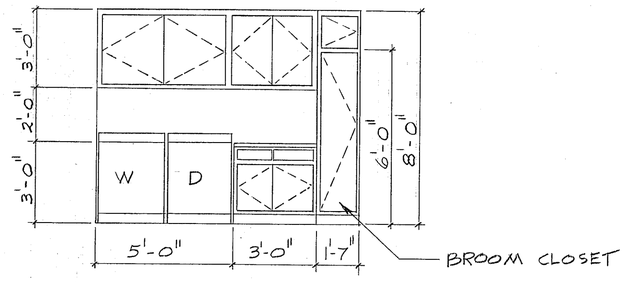

ELEVATION — 7 / 40-A

SCALE: 3/8" = 1'-0"



FEDERAL ROAD REGION NO.	STATE	FEDERAL AID PROJECT NO.	TOTAL SHEETS	SHEET NO.
10	IDAHO	IR-15-1(73)7		

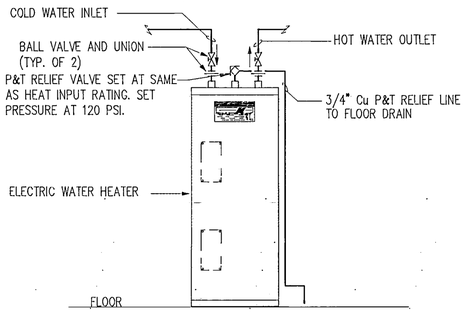

DETAIL – ELECTRIC WATER HEATER — NO SCALE — 8 P-3

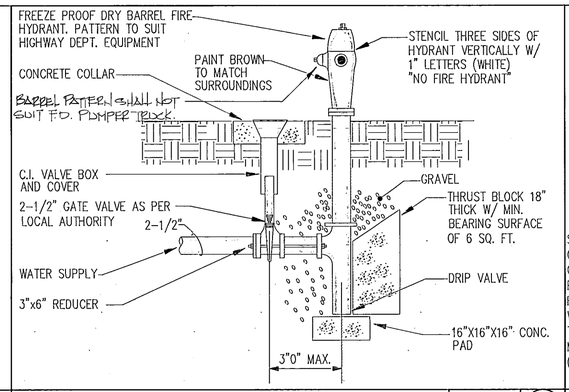

DETAIL – FILL HYDRANT — NO SCALE — 4 P-3

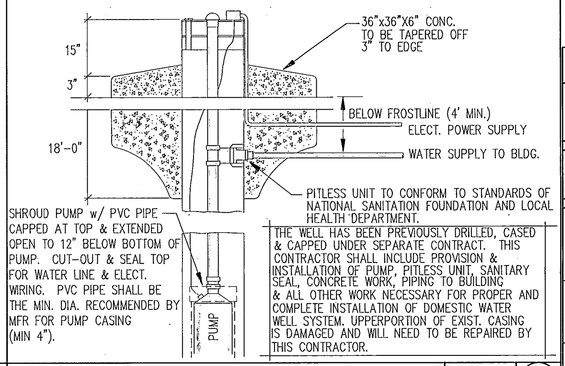

DETAIL – DOMESTIC WATER WELL — NO SCALE — 1 P-3

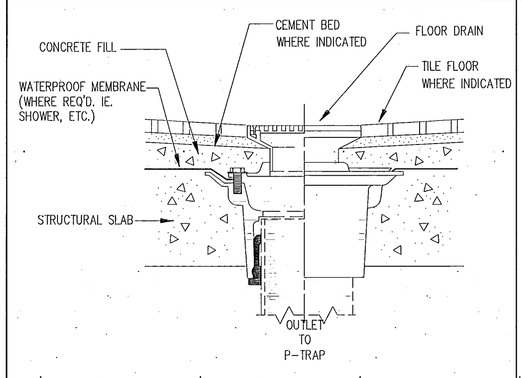

DETAIL – FLOOR DRAIN (FD1) — NO SCALE — 9 P-3

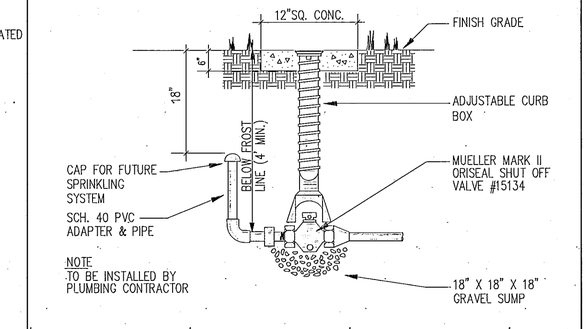

DETAIL – STOP & WASTE — NO SCALE — 5 P-3

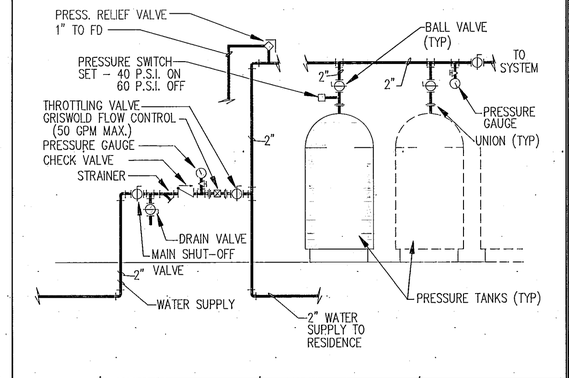

DETAIL – WELL SYSTEM PRESSURE TANKS — NO SCALE — 2 P-3

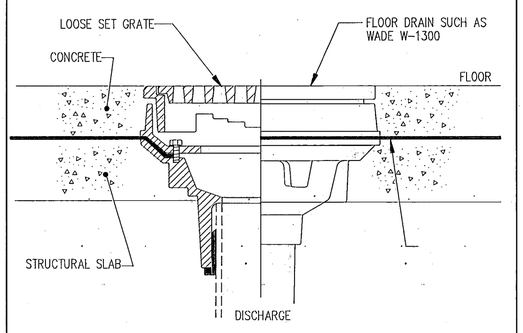

DETAIL – FLOOR DRAIN (FD2) — NO SCALE — 10 P-3

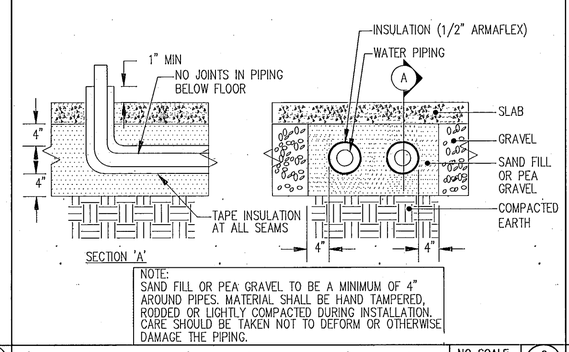

DETAIL – UNDERSLAB WATER PIPING — NO SCALE — 6 P-3

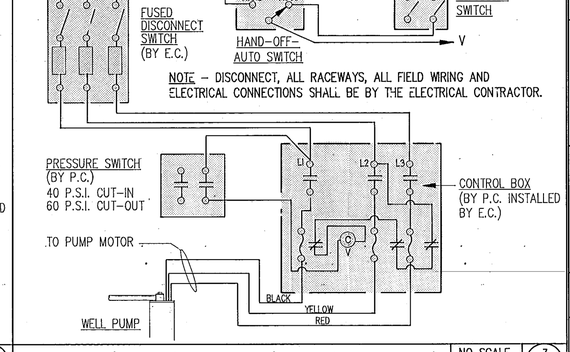

DETAIL – WELL CONTROLS — NO SCALE — 3 P-3

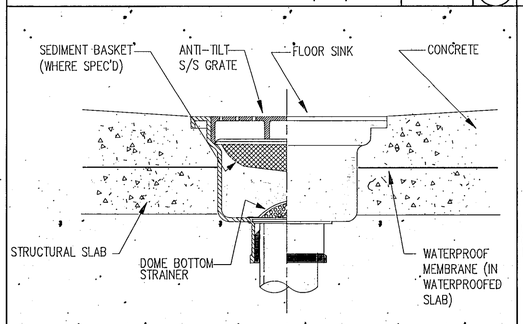

DETAIL – FLOOR SINK (FS) — NO SCALE — 11 P-3

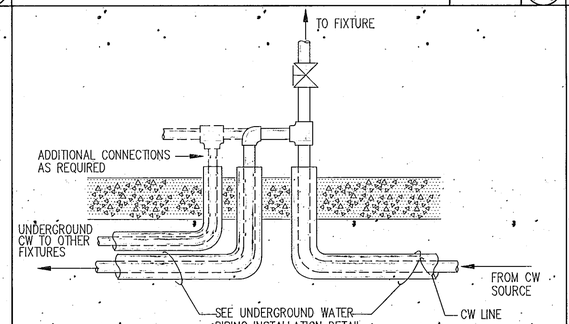

DETAIL – UNDERSLAB WATER FITTINGS — NO. SCALE — 7 P-3

PLUMBING FIXTURE SCHEDULE

PROVIDE SPECIFIED ITEMS OR APPROVED EQUALS. (REFER TO SPECIFICATIONS)

OS=OWNER SUPPLIED; CS=CONTRACTOR SUPPLIED; CI=CONTRACTOR INSTALLED

SYM	DESCRIPTION	W	V	CW	HW	HOW SUPPLIED
P1	WATER CLOSET – AMERICAN STANDARD NEOLO – 2530.012 FOR CONCEALED VALVE, 601314-101 SCREW SET (2) SEAT – OLSONITE #10 BLACK, SPLIT FRONT. FLUSH VALVE – SLOAN SERIES 952-F.W. FLUSHOMETER FOR CONCEALED INSTALLATION.	4"	2"	1"	–	OS CI
P2	WATER CLOSET (HANDICAP) – SAME AS FIXTURE P1 EXCEPT REPLACE SEAT WITH OLSONITE #L210-N-CC 2" LIFT SEAT FOR HANDICAP HEIGHT REQUIREMENTS.	4"	2"	1"	–	OS CI
P3	URINAL – KOHLER DEXTER K-4985-RA 2" 2" 3/4" – WITH REAR SPUD CONCEALED VALVE CONNECTION, SLOAN SERIES 990-F.W. FLUSHOMETER FOR CONCEALED INSTALLATION.	2"	2"	3/4"	–	OS CI
P4	LAVATORY – KOHLER K-2196 (1 HOLE) w/ K-7606 SUPPLY, K-9000 1-1/2" P-TRAP, (1) T&S B-712 SLOW SELF CLOSING FAUCET AND ELJER 803-0530 DRAIN FITTING. ADJUST SELF CLOSING FAUCET SO THAT FLOW IS NO GREATER THAN .25 GAL PER USE.	1-1/2"	1-1/2"	1/2"	1/2"	CS(BASIN) OS(TRIM) CI
P5	LAVATORY (HANDICAP) – SAME AS FIXTURE P4 EXCEPT REPLACE FAUCET WITH SYMONS SCOTT S-60 SELF CLOSING FAUCET. FAUCET TO BE OPERABLE WITH LESS THAN 5 LBS OF APPLIED FORCE.	1-1/2"	1-1/2"	1/2"	1/2"	CS – FAUCET ONLY CI
P6	DRINKING FOUNTAIN – HAWS 3376HFP PEDESTAL FREEZE-PROOF DRINKING FOUNTAIN. 48" MINIMUN BURIAL. CONNECT DRAIN INTO DRINKING FOUNTAIN FRENCH DRAIN. SEE SITE PLAN.	1-1/2"	–	1/2"	–	OS CI
P7	DRINKING FOUNTAIN – HAWS 1114 WALL MOUNTED COMBINATION DRINKING FOUNTAIN WITH 6449 SCREWDRIVER TYPE STOP, 6601 ACCESS PLATE AT BACKSIDE OF WALL AND KOHLER K-9000 1-1/4" P-TRAP.	1-1/2"	1-1/2"	1/2"	–	CS CI
P8	SERVICE SINK – FIAT MS3-2424 (24X24) SINK WITH 830-AA FAUCET (WITH VACUUM BREAKER AND INTERAL STOPS), 832-AA-30" HOSE AND BRACKET, 1453-BB-FLAT STRAINER WITH NEOPRENE GASKET CONNETOR AND 3" C.I. P-TRAP. SUPPLY AND INSTALL WITH 889-CC MOP HANGER AND 77-AA VINYL BUMPER GUARD (2).	3"	2"	3/4"	3/4"	CS CI
P9	WATER HEATER – STATE PX-30-2RT1H, 30 GAL, 4.5 KW, 240V, 1 PH, ELECTRIC WATER HEATER WITH 2 NON-SIMULTANEOUS SANDHOG ELEMENTS. SET THERMOSTAT AT 110° F. RUN HOT WATER THRU SYMONS 5-200-A-W-RC MIXING VALVE. SET MIXING VALVE DISCHARGE AT 90° F.	–	–	3/4"	3/4"	CS CI
P10	PRESSURE TANKS – (4) MYERS MPD 96 TANKS. TANKS SHALL BE FACTORY CHARGED FOR CUT-IN AND CUT-OUT PRESSURES OF 40 AND 60 P.S.I. RESPECTIVELY (100 GAL TANK WITH 30 GAL DRAWDOWN EACH). TANKS SHALL BE INSULATED WITH 1" FIBERGLASS INSULATION WITH PVC VAPOR BARRIER JACKET. INSTALL WITH ONE MYERS PS20D5 PRESSURE SWITCH AT INLET SET FOR 40 PSI CUT-IN AND 60 PSI CUT-OUT. TIE INTO PUMP CONTROL CIRCUITRY.	–	–	2"	–	CS CI
P11	WELL PUMP – RED JACKET #500CN4-13FC, SUBMERSIBLE WELL PUMP AND MOTOR (PUMP – 807-093-5; MOTOR – 851-198-5) RATED AT 48 GPM @ 254 FT TDH (@ 40 PSI) AND 36 GPM @ 300 FT TDH (@ 60 PSI). MOTOR TO BE 5 HP, 208V, 3 PH. (PHASE CONVERTER TO BE PROVIDED UNDER ELECTRICAL CONTRACT.) PROVIDE A 279-231-5 CONTROL BOX w/ 036-183-1 HEATERS. INTERLOCK w/ PR. SW. BY P.C. ON PRESS. TANKS. (40 PSI CUT-IN; 60 PSI CUT-OUT). CONTROL PANEL INSTALLATION & FIELD WIRING BY ELECT. CONTR.	–	–	2"	–	CS CI
P12	LAVATORY – KOHLER K-2868 (1 HOLE) w/ TRIM SAME AS FIXTURE P4.	1-1/2"	1-1/2"	1/2"	1/2"	OS CI
FD1	FLOOR DRAIN – WADE W-1102-STD 6 & P-TRAP.	2"	2"	–	–	CS CI
FD2	FLOOR DRAIN – WADE W-1302 AND P-TRAP.	2"	2"	–	–	CS CI
FS	FLOOR SINK – WADE W-9112-15 CAST IRON SQUARE TOP FLOOR SINK WITH 1/2 GRATE.	2"	2"	–	–	CS CI
HB1	HOSE BIBB – WADE W-8609-L4 GROUND HYDRANT. 4' MINIMUM DEPTH OF BURY.	–	–	–	3/4"	CS CI
HB2	HOSE BIBB – WADE W-8635-89-1 BOX WALL FAUCET WITH LOCKING COVER AND VACUUM BREAKER.	–	–	–	3/4"	CS CI
WF	WALL FAUCET – CHICAGO NO. 7 WITH E27 VACUUM BREAKER.	–	–	–	3/4"	CS CI

REGISTERED PROFESSIONAL ENGINEER 1266 State of Idaho Arthur H. Nielson, Jr.

OWNERSHIP OF DOCUMENTS

This document and the ideas and designs incorporated herein, as an instrument of professional service, is the property of NIELSON ENGINEERING, INC. and is not to be used, in whole or in part, for any other project without the written authorization of an authorized representitive of NIELSON ENGINEERING, INC.

Unauthorized use will be prosecuted to the fullest extent of the Law.

Copyright © 1989 by: NIELSON ENGINEERING, INC.

REVISIONS

DATE	DESCRIPTION	BY

DESIGNED BY	DATE 4-14-89	
DRAWN BY CDH	DATE 4-14-89	
APPROVED	DATE	

VISITOR'S CENTER

sheet title: PLUMBING FIXTURE SCHEDULE AND DETAILS

project: CHERRY CREEK REST AREA

Nielson Engineering, Inc.
Consulting Engineers
120 North Twelfth Avenue Pocatello, Idaho 83201. (208) 232-2577

date 4-14-89 job no. P-8912

revised

sheet P-3 of

FEDERAL ROAD REGION NO.	STATE	FEDERAL AID PROJECT NO.	TOTAL SHEETS	SHEET NO.
10	IDAHO	IR-15-1(79)57		

SUGGESTED SEPTIC SYSTEM MAINTENANCE PROGRAM

1. MAINTENANCE OF SEPTIC TANK AND ABSORPTION SYSTEM SHALL CONFORM TO LOCAL HEALTH DEPARTMENT REQUIREMENTS AND STATE PROCEDURES AS SPECIFIED IN THE TECHNICAL GUIDANCE MANUAL FOR INDIVIDUAL AND SUBSURFACE SEWAGE DISPOSAL.
2. SEPTIC TANK SHOULD BE CHECKED ONCE A YEAR FOLLOWING PROCEDURES OUTLINED IN THE TECHNICAL GUIDANCE MANUAL.
3. THE SEPTIC TANK SHOULD BE PUMPED BEFORE:
   A. SLUDGE FILL OVER 40% OF THE TANK VOLUME OR,
   B. THE SCUM FILLS THE AIR SPACE IN THE TANK.
4. INSPECT FOR PONDING WITHIN THE BED MONTHLY.
5. ROTATE THE SUBSURFACE ABSORPTION UNITS AT LEAST ANNUALLY OR WHENEVER PONDING IS NOTED.
6. IF HIGH GROUNDWATER IS NATURALLY WITHIN 15 FEET OF THE GROUN SURFACE THE ELEVATION OF THE GROUNWATER SHALL BE MEASURED MONTHLY
7. MONITOR GROUNDWATER ANNUALLY FOR CONTAMINATION SUCH AS FECAL COLIFORM, AMMONIA, NITRATE AND CHEMICAL OXYGEN DEMAND OR AS OTHERWISE SPECIFIED IN THE DESIGN APPROVAL.
8. REPORT OPERATION, MAINTENANCE AND MONITORING DATA TO THE DISTRICT HEALTH DEPARTMENT EACH JANUARY FOR THE LAST 12 MONTH PERIOD.
9. MAINTAIN A DETAILED OPERATION AND MAINTENANCE MANUAL FULLY DESCRIBING AND LOCATING ALL THE ELEMENTS OF THE SYSTEM AND OUTLINING MAINTENANCE PROCEDURES NEEDED FOR PROPER OPERATION OF THE SYSTEM AND WHO WILL BE RESPONSIBLE FOR SYSTEM MAINTENANCE. (THIS INFORMATION SHALL ALSO BE BE SUBMITTED TO THE LOCAL HEALTH DEPARTMENT PRIOR TO THE SYSTEM BEING PUT INTO OPERATION.)

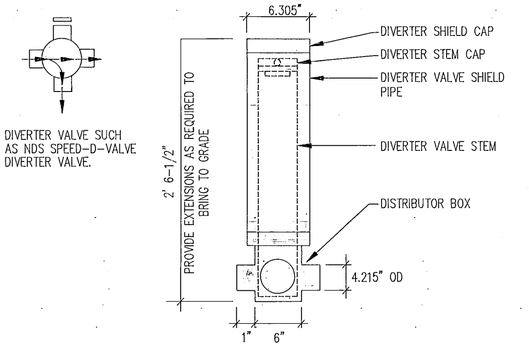

DIVERTER VALVE SUCH AS NDS SPEED-D-VALVE DIVERTER VALVE.

DETAIL – DIVERTER VALVE

NO SCALE — 4 / P-4

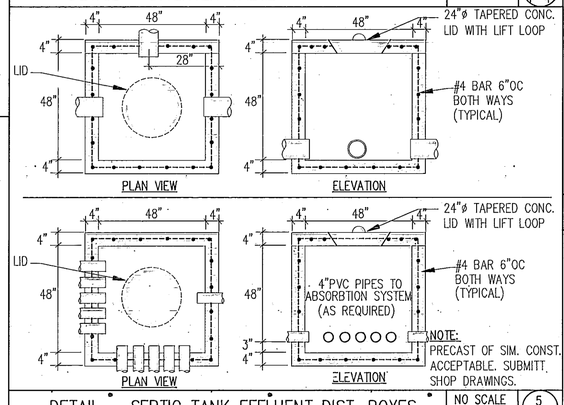

DETAIL – SEPTIC TANK EFFLUENT DIST. BOXES

NO SCALE — 5 / P-4

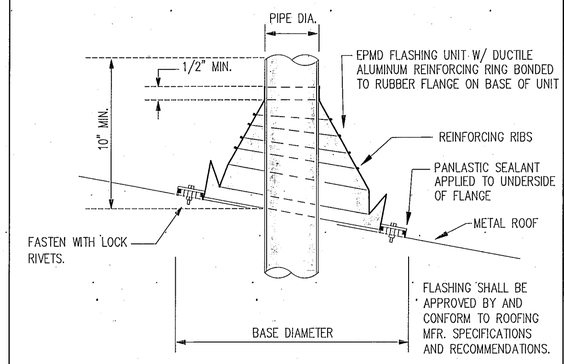

VENT THRU METAL ROOF

NO SCALE — 6 / P-4

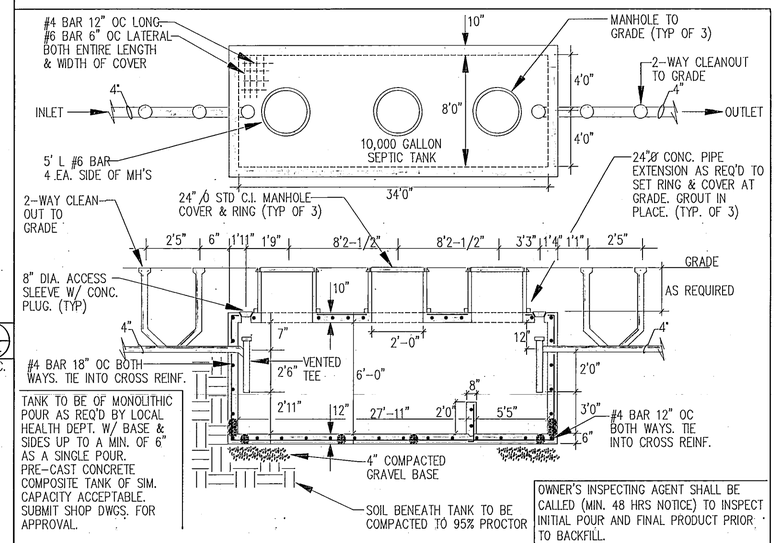

DETAIL – 10,000 GALLON SEPTIC TANK

NO SCALE — 1 / P-4

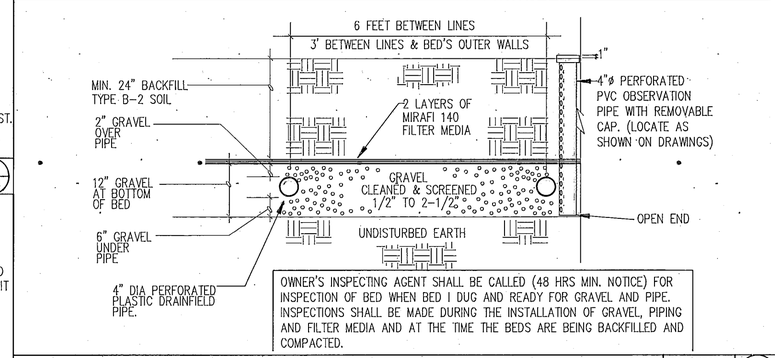

DETAIL – ABSORPTION BED PROFILE

NO SCALE — 2 / P-4

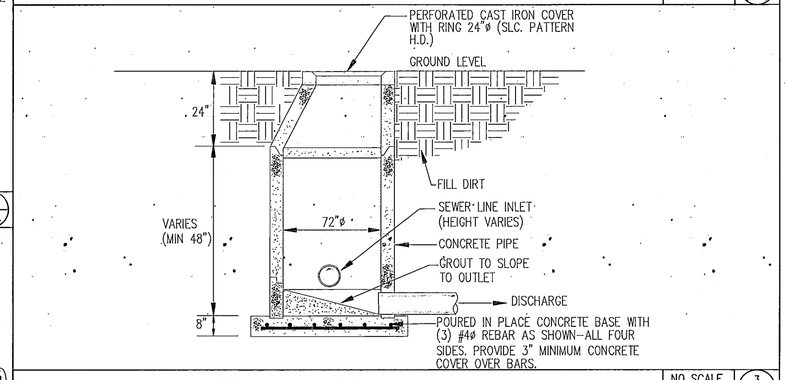

DETAIL – MANHOLE

NO SCALE — 3 / P-4

REGISTERED PROFESSIONAL ENGINEER 1266 State of Idaho Arthur H. Nielson Jr.

OWNERSHIP OF DOCUMENTS

This document and the ideas and designs incorporated herein, as an instrument of professional service, is the property of NIELSON ENGINEERING, INC. and is not to be used, in whole or in part, for any other project without the written authorization of an authorized representitive of NIELSON ENGINEERING, INC.

Unauthorized use will be prosecuted to the fullest extent of the Law.

Copyright © 1989 by: NIELSON ENGINEERING, INC.

sheet title	PLUMBING DETAILS – VISITOR'S CENTER		revised
project	CHERRY CREEK REST AREA		
	Nielson Engineering, Inc. Consulting Engineers		sheet P-4
	120 North Twelfth Avenue	Pocatello, Idaho 83201 (208) 232-2577	
	date 4-14-89	job no. P-8912	of 4

REVISIONS	DESCRIPTION	BY
DATE		

DESIGNED BY	DRF & CDH	DATE 4-14-89
DRAWN BY	CDH	DATE 4-14-89
APPROVED		DATE

FEDERAL ROAD REGION NO.	STATE	FEDERAL AID PROJECT NO.	TOTAL SHEETS	SHEET NO.
10	IDAHO	IR-15-1(73)7		

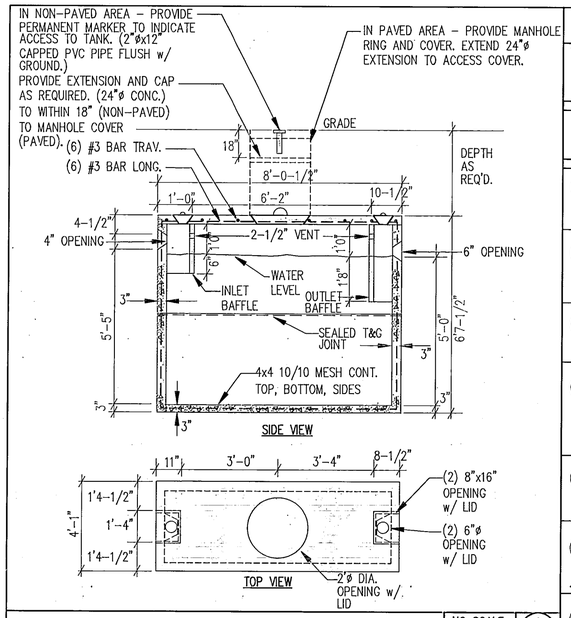

DETAIL - 1000 GAL SEPTIC TANK — NO SCALE — 2 / P-1R

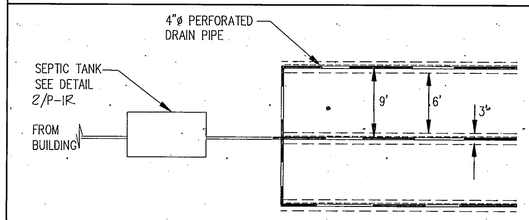

NOTES
1. DRAIN FIELD PIPING SHALL BE SET LEVEL OR AS PER LOCAL HEALTH AUTHORITY.
2. CONTRACTOR SHALL SUBMITT TO ENGINEER A LETTER OF ACCEPTANCE OF THIS PROJECT BY THE ADMINISTRATIVE AUTHORITY.
3. DRAIN PIPING FROM BUILDING TO SEPTIC TANK TO BE OF CAST IRON AND TO GRADE 2' PER 100'.
4. SEE DETAIL 4/P-1R FOR TRENCH CROSS SECTION.
5. WIDTH OF TRENCH TO BE 36".

DETAIL - DRAIN FIELD — NO SCALE — 3 / P-1R

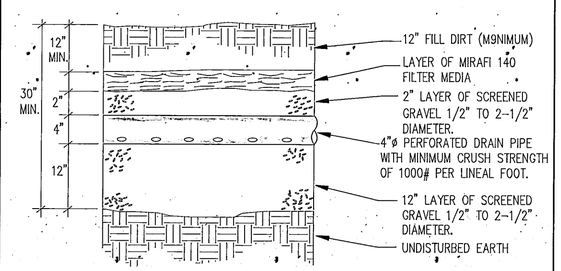

DETAIL - ABSORPTION TRENCH — NO SCALE — 4 / P-1R

PLUMBING FIXTURE SCHEDULE

PROVIDE SPECIFIED ITEMS OR APPROVED EQUALS. (REFER TO SPECIFICATIONS)

SYM	DESCRIPTION	W	V	CW	HW
P1R	WATER CLOSET - BRIGGS 6270 CONSERVER (3.5 GAL.) WITH BRASS CRAFT CR1912DL SUPPLY AND BEMIS 100TT SEAT.	4"	2"	1/2"	-
P2R	LAVATORY - BRIGGS 3004 ANDERSON PORCELAIN STEEL WITH DEARBORN QUARTER TURN SUPPLIES, MOEN 4220 FAUCET AND WASTE SUPPLIES AND 1-1/4" 17 GA. TUBE CHROME PLATED P-TRAP.	1-1/2"	1-1/2"	1/2"	1/2"
P3R	TUB/SHOWER - (1 EACH RIGHT HAND AND LEFT HAND) BRIGGS 2203 PENDANT III WITH MOEN 2235 VALVE AND FAUCET ASSEMBLY, KOHLER 11666 DRAIN AND P-TRAP.	1-1/2"	1-1/2"	1/2"	1/2"
P4R	KITCHEN SINK - ELKAY LR-3322 S.S. SINK WITH DEARBORN QUARTER TURN SUPPLIES, DELTA #100 FAUCET AND SPRAY, 1) ELKAY LK-35 STRAINER, ISE MODEL 77 DISPOSER WITH DISHWASHER CONNECTION, 1-1/2" 17 GA. TUBE CHROME PLATED CONTINUOUS DRAIN AND P-TRAP.	1-1/2"	1-1/2"	1/2"	1/2"
P5R	DISHWASHER CONNECTION - PROVIDE AND INSTALL HOT WATER AND WASTE CONNECTIONS TO DISHWASHER INCLUDING ALL CODE REQWUIRED BACKFLOW PREVENTION, ETC. CONNECT WASTE TO DISPOSER IN SINK.	-	-	-	-
P6R	CLOTHES WASHER CONNECTION - GUY-GRAY NO. T-150-TP-ABS. LOCATE IN FURRED SPACE IN OUTSIDE WALL. WATER PIPES SHALL BE RUN BETWEEN BUILDING INSULATION AND VAPOR BARRIER AND THE WARM SIDE OF THE WALL TO PREVENT FREEZING.	1-1/2"	1-1/2"	1/2"	1/2"
P7R	WATER HEATER - STATE PX52-20RT, 52 GAL., 4.5 KW, 240V, 1ø ELECTRIC WATER HEATER WITH TWO NON-SIMULTANEOUS SANDHOG ELEMENTS. SET THERMOSTAT SO THAT DISCHARGE TEMPERATURE IS 140° F.	-	-	3/4"	3/4"
P8R	BOOSTER PUMP - BELL & GOSSET SERIES 100 IN LINE BRONZE BOOSTER PUMP. 120V, 1750 RPM, 15 GPM @ 7 FT. HEAD TO BE CONTROLLED BY PRESSURE SWITCH LOCATED AT PRESSURE TANK.	-	-	2"	-
P9R	PRESSURE TANK - MYERS MPD36 TANK. TANK SHALL BE FACTORY CHARGED FOR CUT-IN AND CUT-OUT PRESSURES OF 30 AND 50 PSI RESPECTIVELY (36 GAL TANK WITH 11.1 GAL DRAWDOWN). TANK SHALL BE INSULATED WITH 1" FIBERGLASS INSULATION WITH PVC VAPOR BARRIER JACKET. INSTALL WITH MYERS PS20D5 (120V, 1ø) PRESSURE SWITCH AT INLET SET FOR 30 PSI CUT-IN AND 50 PSI CUT-OUT. TIE INTO PUMP CIRCUITRY.	-	-	3/4"	3/4"
P10R	LAUNDRY SINK - ELKAY LR-1918 20 GA. STAINLESS STEEL SINK WITH DEARBORN QUARTER TURN SUPPLIES, DELTA #100 FAUCET, LK-35 STRAINER, 1-1/2" 17 GA TUBULAR CHROME PLATED P-TRAP.	1-1/2"	1-1/2"	1/2"	1/2"
HBR	HOSE BIBB - WOODFORD MODEL 14 WITH NIDEL MODEL 34HD VACUUM BREAKER AND BACKFLOW PREVENTER.	-	-	3/4"	-

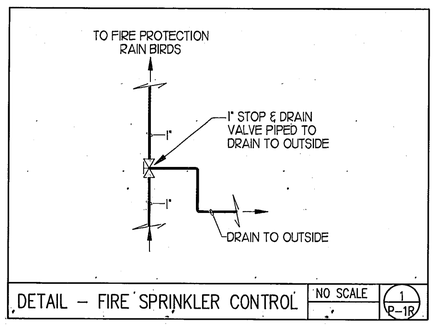

DETAIL - FIRE SPRINKLER CONTROL — NO SCALE — 1 / P-1R

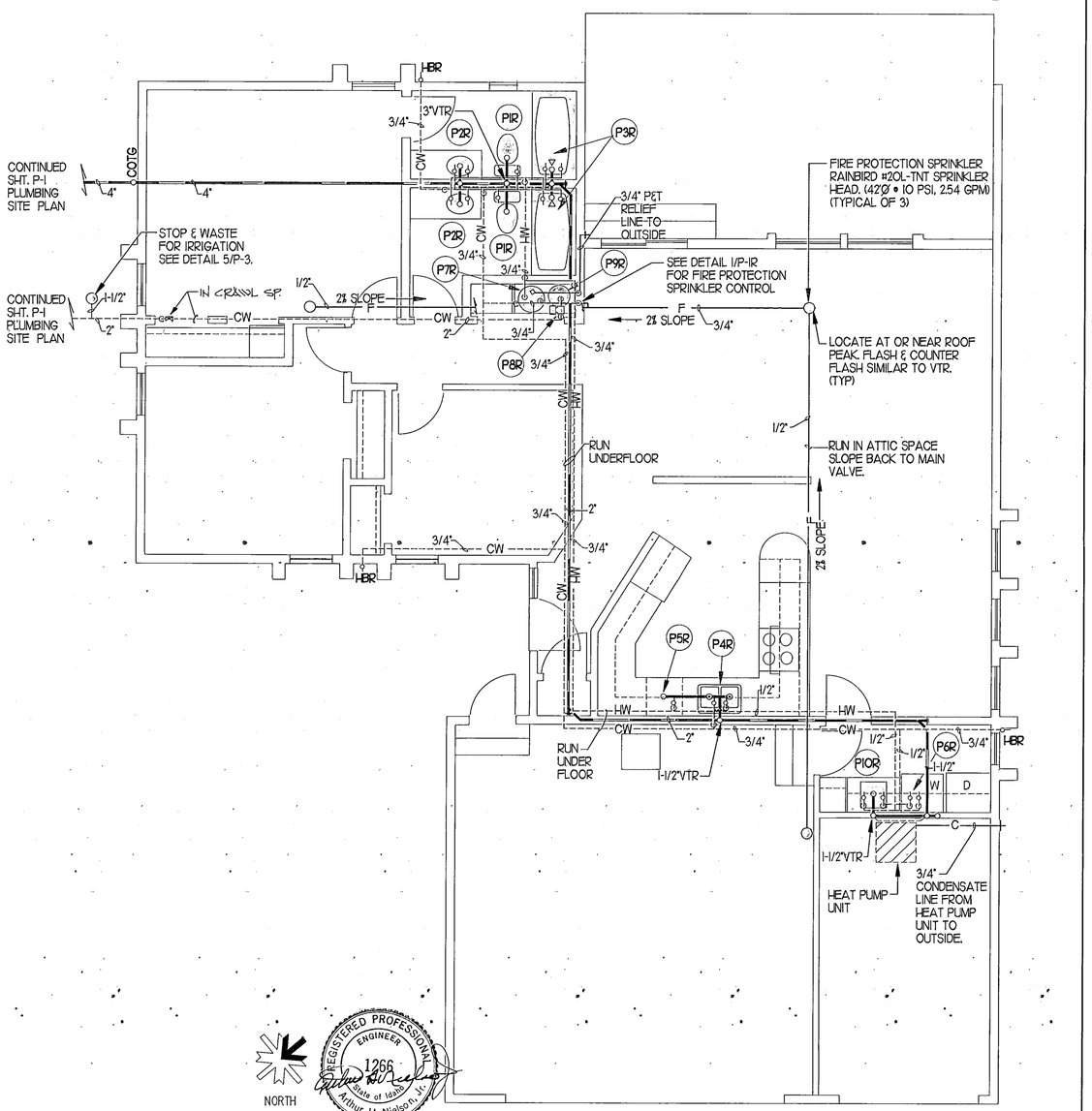

NORTH

REGISTERED PROFESSIONAL ENGINEER 1266 State of Idaho Arthur H. Nielson, Jr.

0 10' 20'
SCALE IN FEET

REVISIONS	DESCRIPTION	BY	DATE

DESIGNED BY	DRE & CDH	DATE 4-14-89
DRAWN BY	CDH	DATE 4-14-89
APPROVED		DATE

OWNERSHIP OF DOCUMENTS
This document and the ideas and designs incorporated herein, as an instrument of professional service, is the property of NIELSON ENGINEERING, INC. and is not to be used, in whole or in part, for any other project without the written authorization of an authorized representitive of NIELSON ENGINEERING, INC.
Unauthorized use will be prosecuted to the fullest extent of the Law.
Copyright © 1989 by: NIELSON ENGINEERING, INC.

sheet title: MAIN LEVEL PLUMBING PLAN - RESIDENCE
project: CHERRY CREEK REST AREA

Nielson Engineering, Inc.
Consulting Engineers
120 North Twelfth Avenue Pocatello, Idaho 83201 (208) 232-2577

date 4-14-89 job no. P-8912

revised

sheet P-1R of 1

FEDERAL ROAD REGION NO.	STATE	FEDERAL AID PROJECT NO.	TOTAL SHEETS	SHEET NO.
10	IDAHO	IR-15-1(73)7		

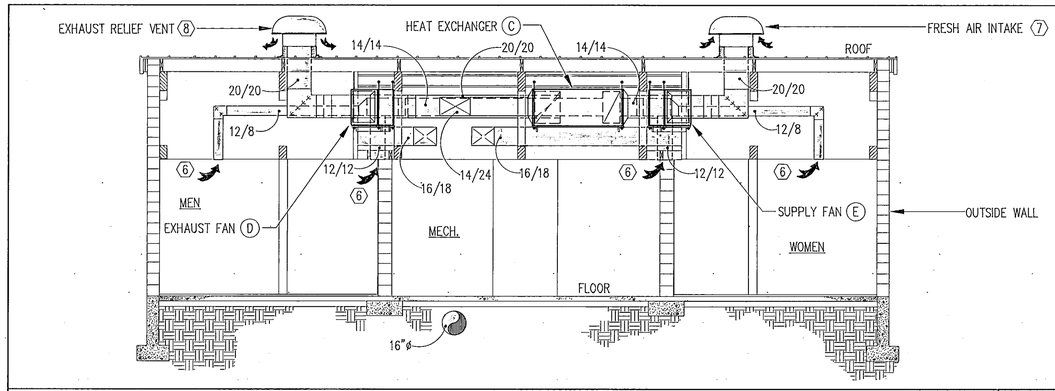

MECHANICAL ROOM SECTION — NO SCALE — (B)

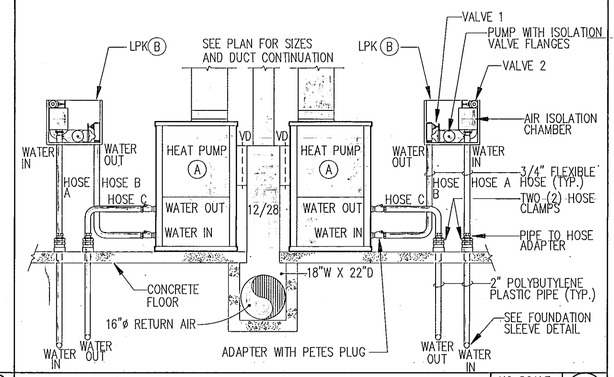

MECHANICAL ROOM SECTION — NO SCALE — (A)

NOTE:
DELETE VOLUME DAMPER FOR RETURN APPLICATION

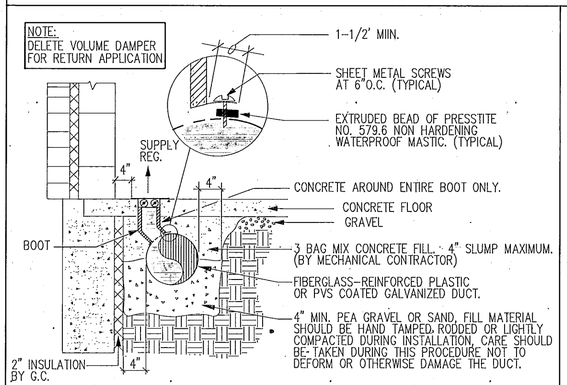

UNDERFLOOR SUPPLY AND RETURN DETAIL — NO SCALE — (5 M-2)

NOTE:
ALL PIPING AND FITTINGS SHALL BE POLYBUTYLENE THERMOPLASTIC RATED AT 125 PSI., 0°F TO 140°F AND CONNECTED BY USING SOCKET HEAT FUSION.

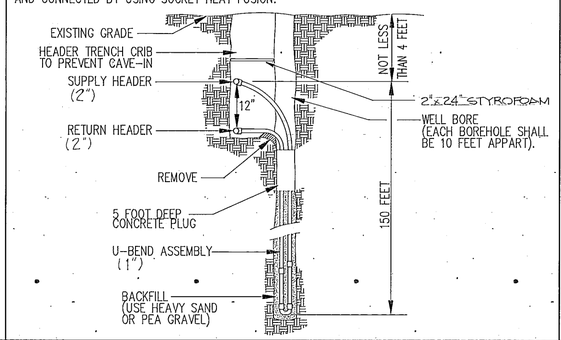

VERTICAL BOREHOLE DETAIL — NO SCALE — (3 M-2)

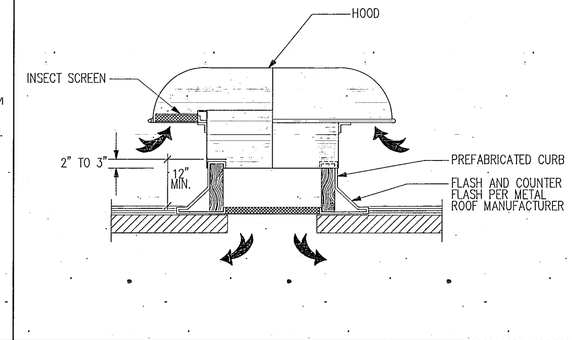

AIR INTAKE AND RELIEF HOOD DETAIL — NO SCALE — (1 M-2)

BELOW SLAB RECOMMENDED METHOD

1. WIPE DIRT AND DUST FROM DUCT ENDS, SECURE SLEEVE INSIDE DUCT WITH SHEET METAL SCREWS. (FIG. 1)
2. APPLY EXTRUDED BEAD OF 579.6 PRESSTITE NON-HARDENING WATER PROOF MASTIC.
3. PRESS JOINING DUCT TIGHTLY AGAINST MASTIC, FORMING WATERPROOF SEAL. SECURE WITH SCREW. (FIG. 2)
4. WRAP JOINT WITH WATERPROOF TAPE, COVERING SCREW HEADS. (FIG. 3)

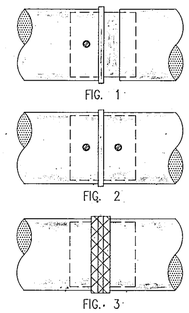

UNDERFLOOR RETURN AIR DUCT JOINT DETAIL — NO SCALE — (6 M-2)

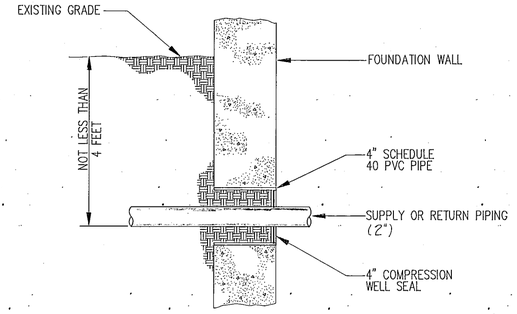

FOUNDATION SLEEVE DETAIL — NO SCALE — (4 M-2)

NOTE:
ALL PIPING AND FITTINGS SHALL BE POLYBUTYLENE THERMOPLASTIC RATED AT 125 PSI., 0°F TO 140°F AND CONNECT BY USING SOCKET HEAT FUSION.

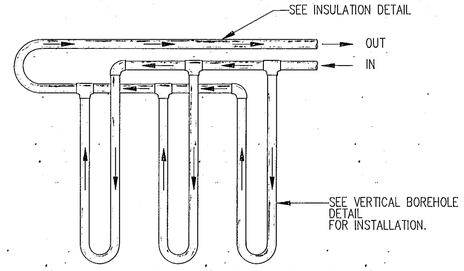

TYPICAL REVERSE RETURN PIPING CONFIGURATION

MANIFOLD PIPING ARRANGEMENT DETAIL — NO SCALE — (2 M-2)

REVISIONS

date	description	by

DESIGNED BY	GAN	DATE 4-21-89
DRAWN BY	CJH	DATE 4-21-89
APPROVED	GAN	DATE 4-21-89

REGISTERED PROFESSIONAL ENGINEER 1266 State of Idaho Arthur H. Nielson, Jr.

OWNERSHIP OF DOCUMENTS
This document and the ideas and designs incorporated herein, as an instrument of professional service, is the property of NIELSON ENGINEERING, INC. and is not to be used, in whole or in part, for any other project without the written authorization of an authorized representitive of NIELSON ENGINEERING, INC.
Unauthorized use will be prosecuted to the fullest extent of the Law.
Copyright © 1989 by: NIELSON ENGINEERING, INC.

sheet title: MECHANICAL DETAILS - VISITOR'S CENTER
project: CHERRY CREEK REST AREA

Nielson Engineering, Inc.
Consulting Engineers
120 North Twelfth Avenue
Pocatello, Idaho 83201
(208) 232-2577

date 4-21-89 | job no. P-8912

revised

sheet M-2 of 2

FEDERAL ROAD REGION NO.	STATE	FEDERAL AID PROJECT NO.	TOTAL SHEETS	SHEET NO.
10	IDAHO	IR-15-1(73)7		

REVISIONS

no.	description	by	date

DESIGNED BY GAN DATE 4-21-89
DRAWN BY CJH DATE 4-21-89
APPROVED GAN DATE 4-21-89

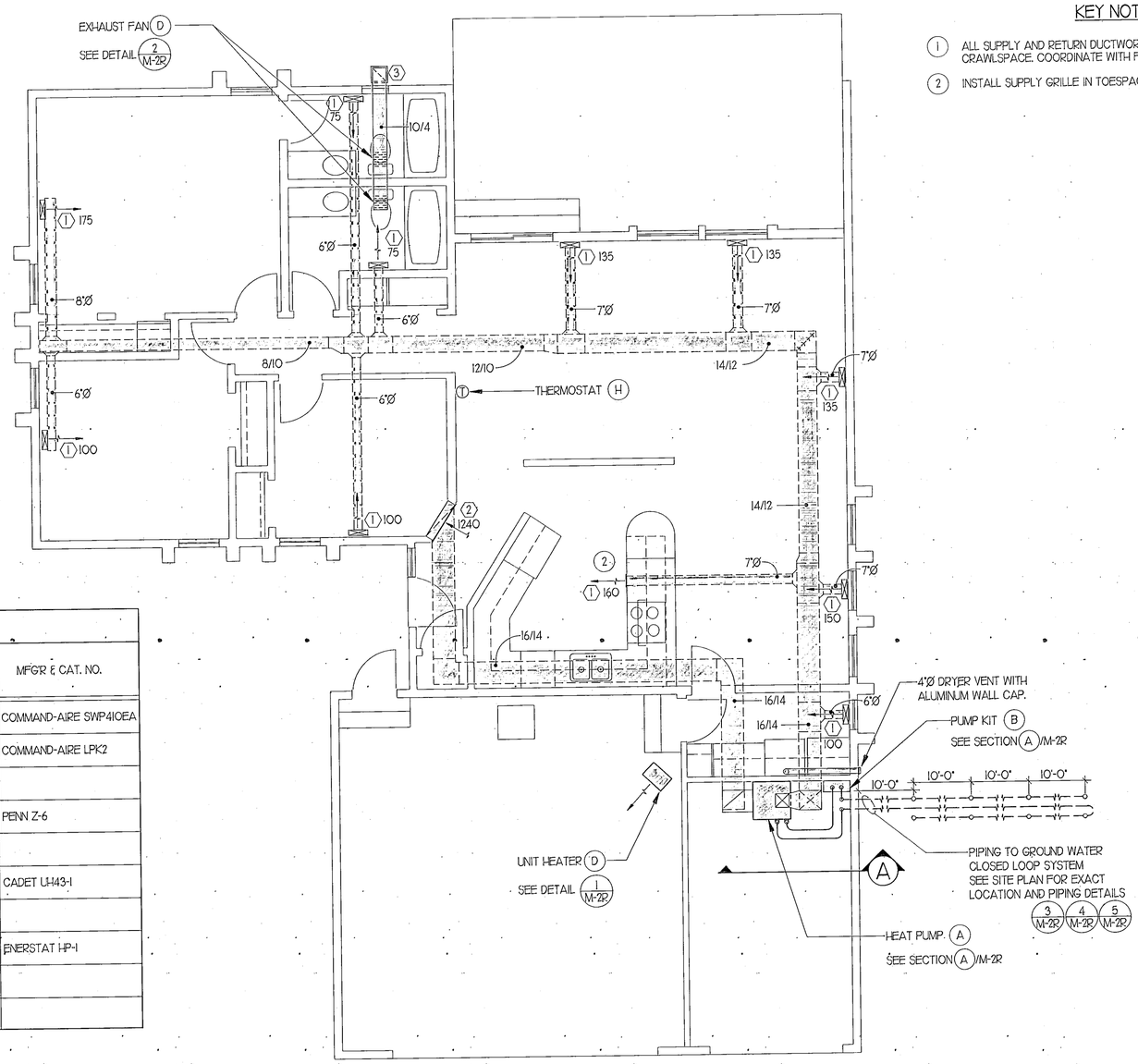

KEY NOTES

1. ALL SUPPLY AND RETURN DUCTWORK SHALL BE RAN IN THE CRAWLSPACE. COORDINATE WITH FLOOR JOISTS AND FOOTINGS.
2. INSTALL SUPPLY GRILLE IN TOESPACE OR CABINETS.

MECHANICAL EQUIPMENT SCHEDULE

SYM	DISCRIPTION	HEAT		COOL	FAN			POWER				DIMENSIONS			WT	NOTES	MFG'R & CAT. NO.
		BTU	KW	TONS	CFM	ESP	RPM	HP	V	FLA	PH	L	H	D			
A	HEAT PUMP	40,000		3.4	1320	.4	—	1/3	240	20.1	1	27-1/2	47-1/2	27-1/2	295	12.0 GPM W/ HOSE KIT	COMMAND-AIRE SWP41OEA
B	PUMP KIT							1/6	120	2.2	1	19-1/4	16	7	56	12 GPM • 17.5FT.	COMMAND-AIRE LPK2
C																	
D	EXHAUST FAN				95	.1	—		120	50 WATTS	1	13	9	9	18	W/ROOF CAP	PENN Z-6
E																	
F	UNIT HEATER		3		200				240	13.5	1	18	17	12	27	W/BUILT-IN STAT AND HANGER	CADET U-143-I
G																	
H	THERMOSTAT																ENERSTAT HP-1
J																	
K																	

GRILLES AND DIFFUSERS SCHEDULE

SYMBOL	TYPE	FINISH	SIZE	MFG'R & CATALOG NO.
1	FLOOR SUPPLY	GOLDEN SAND	4 X 14	HART & COOLEY 411
2	WALL RETURN	GOLDEN SAND	12 X 30	HART & COOLEY 265
3	SOFFIT GRILLE	ALUMINUM	12 X 12	TITUS 25RL
4				
5				
6				

MECHANICAL FLOOR PLAN

0 10' 20'
SCALE IN FEET

NORTH

REGISTERED PROFESSIONAL ENGINEER 12666 State of Idaho Arthur H. Nielson, Jr.

OWNERSHIP OF DOCUMENTS
This document and the ideas and designs incorporated herein, as an instrument of professional service, is the property of NIELSON ENGINEERING, INC. and is not to be used, in whole or in part, for any other project without the written authorization of an authorized representitive of NIELSON ENGINEERING, INC.
Unauthorized use will be prosecuted to the fullest extent of the Law.
Copyright © 1989 by: NIELSON ENGINEERING, INC.

sheet title MAIN LEVEL MECHANICAL PLAN - RESIDENCE
revised
project CHERRY CREEK REST AREA
sheet M-1R of 2

Nielson Engineering, Inc.
Consulting Engineers
120 North Twelfth Avenue Pocatello, Idaho 83201 (208) 232-2577

date 4-21-89 job no. P-8912

FEDERAL ROAD REGION NO.	STATE	FEDERAL AID PROJECT NO.	TOTAL SHEETS	SHEET NO.
10	IDAHO	IR-15-1(73)7		

NOTE:
ALL PIPING AND FITTINGS SHALL BE POLYBUTYLENE THERMOPLASTIC RATED AT 125 PSI., 0°F TO 140°F AND CONNECT BY USING SOCKET HEAT FUSION.

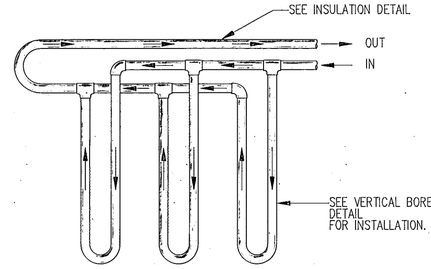

TYPICAL REVERSE RETURN PIPING CONFIGURATION

MANIFOLD PIPING ARRANGEMENT DETAIL

NO SCALE | 3 M-2R

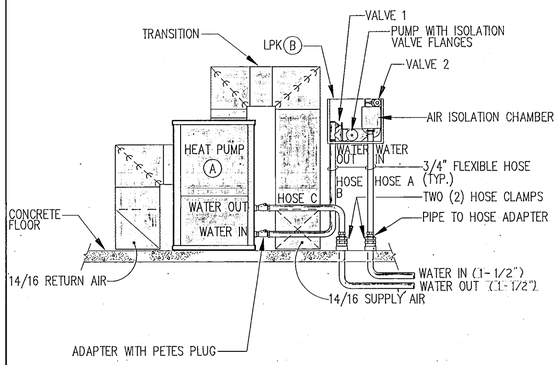

MECHANICAL ROOM SECTION

NO SCALE | A

NOTE:
ALL PIPING AND FITTINGS SHALL BE POLYBUTYLENE THERMOPLASTIC RATED AT 125 PSI., 0°F TO 140°F AND CONNECTED BY USING SOCKET HEAT FUSION.

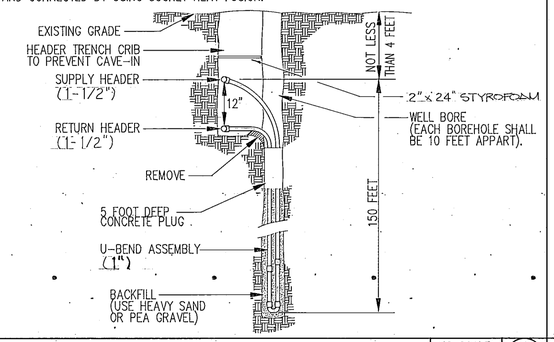

VERTICAL BOREHOLE DETAIL

NO SCALE | 4 M-2R

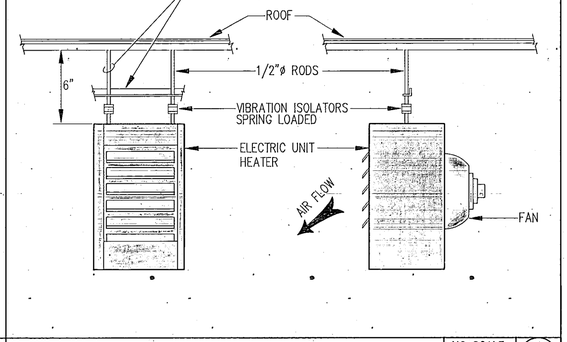

ELECTRIC UNIT HEATER DETAIL

NO SCALE | 1 M-2R

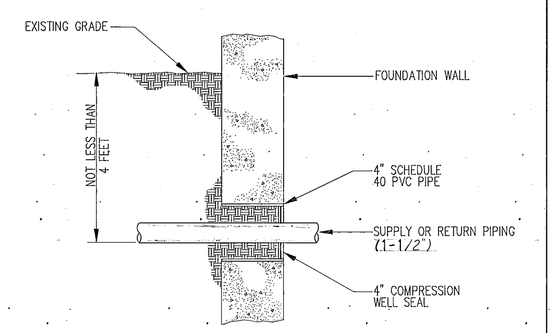

FOUNDATION SLEEVE DETAIL

NO SCALE | 5 M-2R

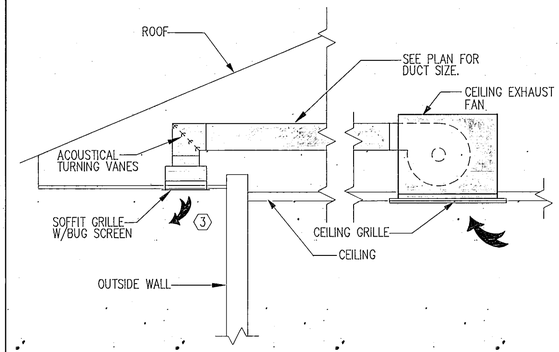

CEILING EXHAUST FAN DETAIL

NO SCALE | 2 M-2R

REGISTERED PROFESSIONAL ENGINEER
1266
State of Idaho
Arthur H. Nielson Jr.

REVISIONS

no.	description	by

		DATE
DESIGNED BY	GAN	4-21-89
DRAWN BY	C.H.	4-21-89
APPROVED	GAN	4-21-89

OWNERSHIP OF DOCUMENTS
This document and the ideas and designs incorporated herein, as an instrument of professional service, is the property of NIELSON ENGINEERING, INC. and is not to be used, in whole or in part, for any other project without the written authorization of an authorized representitive of NIELSON ENGINEERING, INC.
Unauthorized use will be prosecuted to the fullest extent of the Law.
Copyright © 1989 by: NIELSON ENGINEERING, INC.

sheet title: MECHANICAL DETAILS – RESIDENCE
project: CHERRY CREEK REST AREA

Nielson Engineering, Inc.
Consulting Engineers
120 North Twelfth Avenue Pocatello, Idaho 83201 (208) 232-2577

date 4-21-89 | job no. P-8912

revised

sheet M-2R of 2

FEDERAL ROAD REGION NO.	STATE	FEDERAL AID PROJECT NO.	TOTAL SHEETS	SHEET NO.
10	IDAHO	IR-15-1(73)7		

GENERAL NOTES

1. CONCRETE J-BOX. SUPPLY WITH METAL TRAFFIC LID. TYPE C, 17" X 22" X 18". (TYP) AMCOR
2. PULL CONDUCTORS TO TRANSFORMER. PROVIDE 6' OF WIRE FOR MAKEUP. FINAL CONNECTIONS BY UPCO.

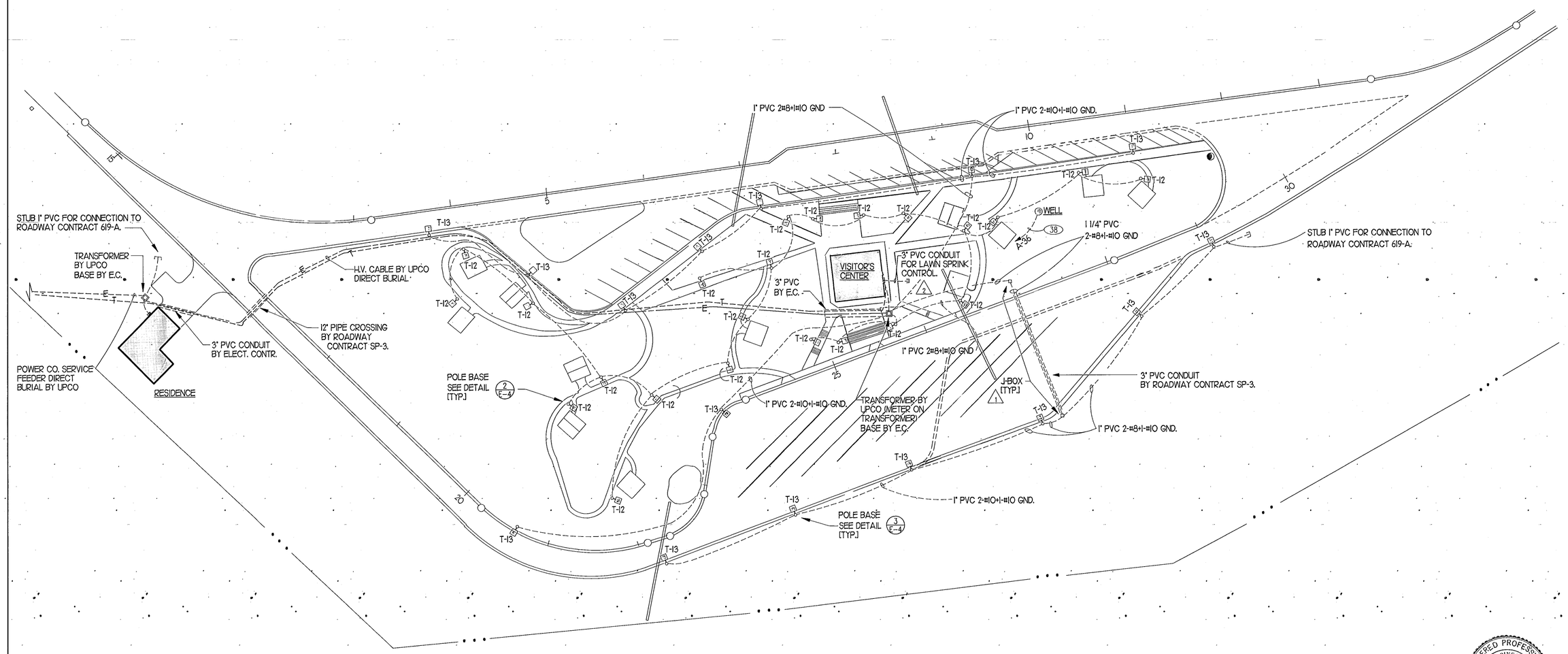

REVISIONS	DESCRIPTION	BY	DATE

		DATE
DESIGNED BY	AHN	4-14-89
DRAWN BY	CDH	6-15-89
APPROVED		DATE

0. 50' 100' 200'
SCALE IN FEET

NORTH

REGISTERED PROFESSIONAL ENGINEER 1266 State of Idaho Arthur H. Nielson, Jr.

OWNERSHIP OF DOCUMENTS
This document and the ideas and designs incorporated herein, as an instrument of professional service, is the property of NIELSON ENGINEERING, INC. and is not to be used, in whole or in part, for any other project without the written authorization of an authorized representitive of NIELSON ENGINEERING, INC.
Unauthorized use will be prosecuted to the fullest extent of the Law.
Copyright © 1989 by: NIELSON ENGINEERING, INC.

sheet title: ELECTRICAL SITE PLAN
project: CHERRY CREEK REST AREA
revised:
sheet: E-1
of:

Nielson Engineering, Inc.
Consulting Engineers
120 North Twelfth Avenue Pocatello, Idaho 83201 (208) 232-2577

date: 4-14-89 job no. P-8912

FEDERAL ROAD REGION NO.	STATE	FEDERAL AID PROJECT NO.	TOTAL SHEETS	SHEET NO.
10	IDAHO	IR-15-1(73)7		

PANEL H | VOLTAGE 120/240 | MAINS 200 AMP. | MOUNTING ■ FLUSH | DIMENSIONS 20 W, 5 3/4 D, 38 H | SPECIAL EQUIP | LOCATION

TYPE NQOD | PHASE 1

FEED TOP ■ BOTTOM ☐ | WIRES 3 | ☐ LUGS ■ BRKR. | ☐ SURFACE

CIR. NO.	LOAD DESCRIPTION	NO. OUTLET LTS.	CO	MIS	FUSE P	AMP	WIRE SIZE	CIR. LOAD	COMBINED LOAD A	B	C	CIR. LOAD	WIRE SIZE	FUSE AMP	P	NO. OUTLET MIS	CO	LTS.	LOAD DESCRIPTION	CIR. NO.
1		2	7		1	20	12	1000	2000			1000	12	20	1		5	1		2
3	EXH. FANS	4	3	2				1200			2200	1000					5	3		4
5			3					1000	1500			500					2			6
7			3					500			1500	1000					1		DISHWASHER	8
9	DISPOSAL & EXH. FANS		2	1				1000	2500			1000					2	5		10
11			5					1000			2500	1500					1		WASHER	12
13		4						500	1100			600						5		14
15		4						500			1000	500					1		DOOR OPENER	16
17	PUMP KIT			1				1200	2200			1000					7			18
19		2	6					1000			1000								SPARE	20
21	SPARE																			22
23	↓																		↓	24
25	RANGE				1	2	50	2000	4250			2250	30	30	2	1			WATER HEATER	26
	—				—	—	—	2000			4250	2250		—	—	—			—	
27	HEAT PUMP				1	2	30	2500	4500			2000	30	30	2	1			DRYER	28
	—				—	—	—	2500			4500	2000		—	—	—			—	
29	SPARE					2	20		1500			1500	12	20	2	1			UNIT HEATER	30
	—					—	—				1500	1500	—	—	—	—			—	
31	SPARE					2	20							20	1				SPARE	32
33																				34
35	↓																		↓	36

TOTAL CONNECTED LOAD 38 K.W.

FEED BRKR. SIZE 200 AMPS.

19550		18450
TOTALS		
163		154
AMPS. PER PHASE		

CONDUIT AND WIRE SIZE (340)

NOTES

GENERAL NOTES

1. DOOR BELL TRANSFORMER IS TO BE LOCATED AT PANEL 'H'.
2. ELECTRICAL CONTRACTOR SHALL COORDINATE ALL LAMP TYPES WITH FIXTURE TYPE BEFORE ORDERING.
3. ELECTRICAL CONTRACTOR SHALL REFER TO THE MECHANICAL DRAWINGS FOR EXACT LOCATIONS OF ALL MECHANICAL EQUIPMENT AND ELECTRICAL CONNECTIONS.
4. ELECTRICAL CONTRACTOR SHALL PROVIDE MINIMUM WORKING CLEARANCE AS PER NEC BEFORE INSTALLING ANY ELECTRIC PANELS OR CABINETS.
5. ALL SURFACE MOUNTED FLUORESCENT FIXTURES SHALL BE SUITABLE FOR MOUNTING ON LOW DENSITY TYPE CEILINGS.
6. ELECTRICAL CONTRACTOR SHALL PROVIDE 6 #16 CONTROL WIRES FROM HEATING UNIT TO THERMOSTATE LOCATION.
7. ELECTRICAL CONTRACTOR SHALL ESTABLISH THE EXACT LOCATION OF THE ELECT. TRANSFORMER BEFORE INSTALLING SERVICE CONDUIT.
8. SWITCH ALTERNATE BALLASTS FOR TWO LEVELS OF LIGHT IN KITCHEN FIXTURE.

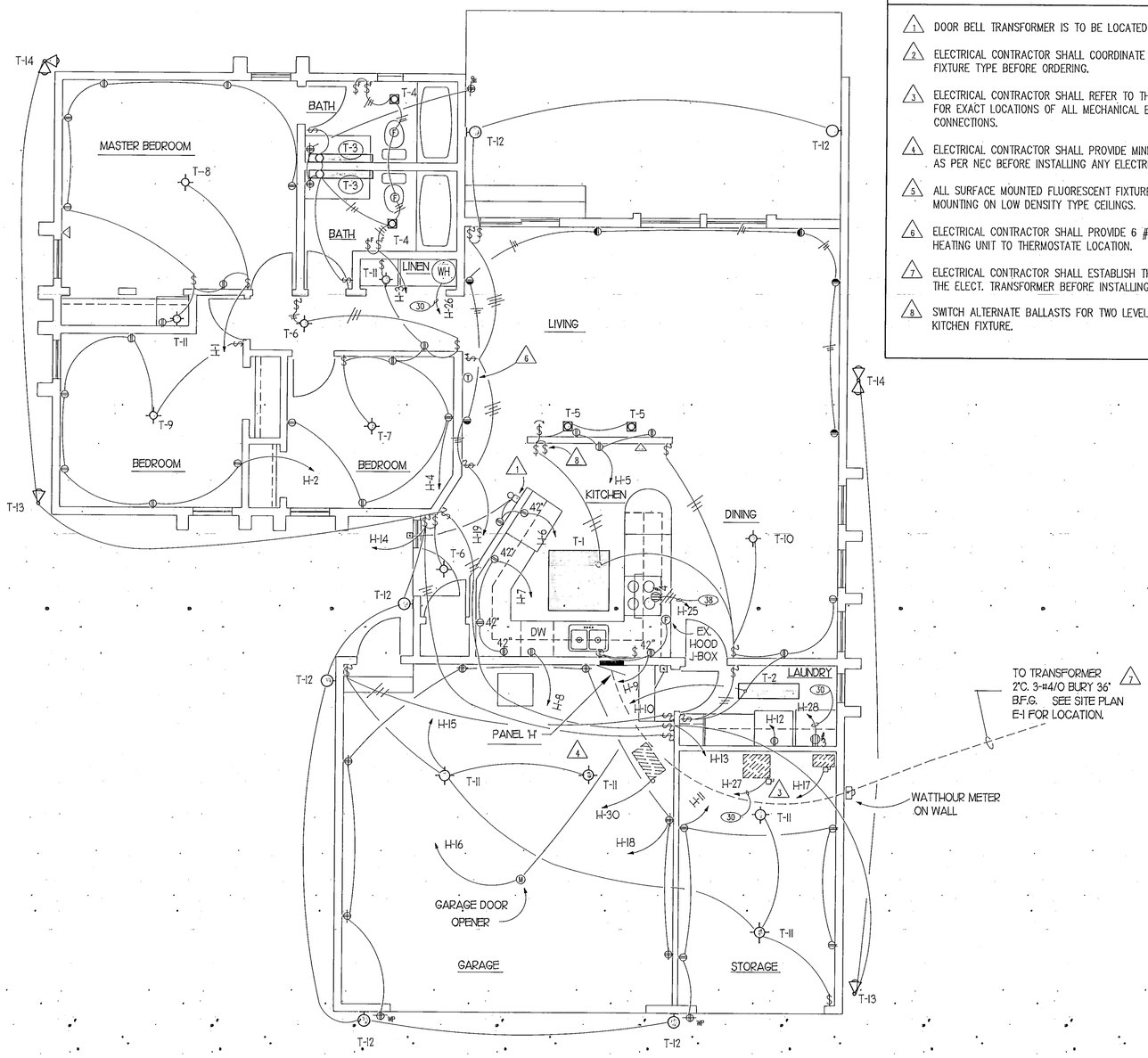

LIGHT FIXTURE SCHEDULE

TYPE	MANUFACTURER	CATALOG NUMBER	VOLTS	MOUNTING △5	LAMPS △2
T-1	LITHONIA ACME	4356-48-4R	120	CEILING	4-F40/CW/WM
T-2	DAY-BRITE	45257-4		CEILING	2-F40/CW/WM
T-3	DAY-BRITE	45242-4		WALL ABOVE MIRROR-68"	2-F40/CW/WM
T-4	NUTONE	9410		RECESSED	INCL.
T-5	PROGRESS	P6652		RECESSED	1-50W R-30
T-6	PROGRESS	P3756-10		CEILING	1-60W
T-7	PROGRESS	P4713			2-60W
T-8	PROGRESS	P3621			3-60W
T-9	PROGRESS	P4944			3-60W
T-10	PROGRESS	P4496			5-100W
T-11	LEVITON	9875-2			1-60W
T-12	PROGRESS	P5869-60		WALL @ 84"	1-60W
T-13	PROGRESS	P5202		UNDER SOFIT	1-PAR 38
T-14	PROGRESS	P5203		UNDER SOFIT	2-PAR 38
	NUTONE	LA-11 DOOR CHIME			

REVISIONS	DESCRIPTION	date	by

DESIGNED BY	ALN	DATE 4-14-89
DRAWN BY	AL	DATE 4-14-89
APPROVED		DATE

SCALE IN FEET: 0, 10', 20'

REGISTERED PROFESSIONAL ENGINEER 1266 State of Idaho Arthur H. Nielson, Jr.

OWNERSHIP OF DOCUMENTS

This document and the ideas and designs incorporated herein, as an instrument of professional service, is the property of NIELSON ENGINEERING, INC. and is not to be used, in whole or in part, for any other project without the written authorization of an authorized representitive of NIELSON ENGINEERING, INC.

Unauthorized use will be prosecuted to the fullest extent of the Law.

Copyright @ 1989 by: NIELSON ENGINEERING, INC.

sheet title: RESIDENCE ELECTRICAL LIGHTING AND POWER

project: CHERRY CREEK REST AREA

revised:

sheet: E-3 of

Nielson Engineering, Inc.
Consulting Engineers
120 North Twelfth Avenue Pocatello, Idaho 83201 (208) 232-2577

date 4-14-89 | job no. P-8912

FEDERAL ROAD REGION NO.	STATE	FEDERAL AID PROJECT NO.	TOTAL SHEETS	SHEET NO.
10	IDAHO	IR-15-1(73)7		

ELECTRICAL SYMBOL & OUTLET SCHEDULE

SYMBOL	DESCRIPTION	MOUNTING HEIGHT *	WIRING DEVICE	NOTES
○	CEILING LIGHT OUTLET	CEILING	SEE FIXTURE SCHEDULE	(1)
H○	WALL LIGHT OUTLET	(AS NOTED)		(1)
▢	RECESSED INCANDESCENT LIGHT FIXTURE	CEILING		(1) (2)
▭	FLUORESCENT LIGHT FIXTURE	(AS NOTED)		(1) (2)
H⊗	WALL MOUNTED EXIT LIGHT	(AS NOTED)		(1) (3)
⊗	CEILING MOUNTED EXIT LIGHT	CEILING		(1) (3)
◁○	FLOODLIGHT	(AS NOTED)		(1)
⋈	FLUORESCENT NIGHT LIGHT (DO NOT SWITCH)	(AS NOTED)		(1) (2)
$	SINGLE POLE SWITCH	4' – 0"	HUBBELL # 1221 – 1	(4) (5)
$3	THREE–WAY SWITCH	4' – 0"	HUBBELL # 1223 – 1	(4) (5)
$4	FOUR–WAY SWITCH	4' – 0"	HUBBELL # 1224 – 1	(4) (5)
$P	SWITCH & PILOT LIGHT	4' – 0"	HUBBELL # 1221 – PL	(5)
$*	VARIABLE INTENSITY SWITCH	4' – 0"	(SEE SPECS)	
$F	FAN SWITCH	4' – 0"	PARAGON # FF – 15 – 0	
$T	THERMAL OVERLOAD SWITCH WITH PILOT LIGHT (IF OUTSIDE – W.P.)	4' – 0"	SQUARE–"D" # 2510 FG IP	(6)
⊘$	COMBINATION SWITCH & DUPLEX OUTLET	4' – 0"	HUBBELL #1221–1, HUBBELL #5362H–1	
T	TIMED SWITCH (ASTRO)	+ 5' – 0"	TORK # 7300ZL	(9)
T	TIMED SWITCH (24–HR.)	+ 5' – 0"	TORK #730 OL	(9)
E	ELECTRIC EYE WITH RELAY	(AS NOTED)	TORK 2101 (120 V.) 2102 (208 – 277 V.)	(9)
T	THERMOSTAT (ELECTRIC)	+ 5' – 0 '	(SEE MECHANICAL)	
■	TELEVISION OUTLET (4–SQUARE)	18"	(SEE SPECS)	
⊖	GROUNDING TYPE DUPLEX CONVENIENCE OUTLET	18"	HUBBELL #5362H–1, NEMA #5–20	(5)
⊖W.P.	WEATHERPROOF CONVENIENCE OUTLET	+ 2' – 0"	SIERRA WPD – 8	(5)
⊕	DUPLEX CONVENIENCE OUTLET – GFI	18"	HUBBELL #GF5352–I	(5)
⊕	DOUBLE DUPLEX OUTLET	18"	HUBBELL #5282–I (2–EA.)	(5)
⊖	SINGLE CONVENIENCE OUTLET	18"	HUBBELL 5361–1	
⊙	FLOOR OUTLET WITH 15–AMP DEVICE	FLOOR	HUBBELL #3–2429, #S–2425, #SC–3091	
— P —	PLUG MOLD (LENGTH AS REQ'D)	+ 3' – 6"	WIREMOLD 2010618 W/OUTLETS AT 18" O.C.	EXCEPT AS NOTED
⊖#	SPECIAL OUTLET W\CAP (PROVIDE W\MATCHING PLUG) ● : LIFT COVER ▲ : 4'–0" CORD (MOUNT @ 2'–0")			(5)
J	JUNCTION BOX (WALL MOUNTED)	(HEIGHT NOTED)		
J" " F	JUNCTION BOX ("C"–IN CEILING, "F"–IN FLOOR)			
J	JUNCTION BOX PROVIDED IN EQUIPMENT			
M	MOTOR–OUTLET	TO SUIT EQUIPMENT		
F	FAN MOTOR OUTLET (CEILING, OR AS NOTED)	(SEE MECHANICAL)		
	DISCONNECT SWITCH ("F" – FUSED)	+ 5' – 0"	SQUARE–"D", GENERAL DUTY	(6) (7)
	MAGNETIC STARTER	+ 5' – 0"	SQUARE–"D" # 8536	(6) SIZE TO EQUIP.
	MAGNETIC STARTER / DISCONNECT	+ 5' – 0"	SQUARE–"D" # 8538	(6) SIZE TO EQUIP.
	BREAKER – STARTER COMBINATION	+ 5' – 0"	SQUARE–"D" # 8539	(6) SIZE TO EQUIP.
▲	TELEPHONE & DATA OUTLET	18"	(SEE SPECS)	
△	HOUSE PHONE	54"		
◭	TELEPHONE & DATA OUTLET	FLOOR	HUBBELL #3–2429, #S–2425, #SC–3090	
	TELEPHONE AND/OR POS BOARD	TOP AT 6' – 6"	(AS NOTED)	
	PANEL BOARD	TOP AT 6' – 6"	(SEE SCHEDULE)	
	MAIN POWER PANEL		(SEE SCHEDULE)	
•	PUSHBUTTON	4'–0" (OR AS SHOWN)	SQUARE–"D" #9001 – BF201	
C	PROGRAM CLOCK	+7'–6" (OR AS NOTED)	(SEE SPECS)	
C	CLOCK OUTLET	+7'–6" OR AS NOTED	HUBBELL # 5235	
⊙S	IONIZATION DETECTOR	CEILING	(SEE SPECS)	
⊙#	HEAT DETECTOR	CEILING	(SEE SPECS)	(8)
S	TEMPERATURE SENSOR (WIRE W/BELDON #8762)	+ 5' – 0"	(SEE MECH. DWGS.)	SEE SHT. E–3
F	FIRE ALARM BREAK GLASS STATION	+ 5' – 0"	(SEE SPECS)	
FA	FIRE ALARM CONTROL CABINET		(SEE SPECS)	
F	FIRE ALARM SIGNAL HORN	+7'–6" (OR AS NOTED)	(SEE SPECS)	
C	INTERCOM.	(AS NOTED)	(SEE SPECS)	
#S	SOUND SYSTEM SPEAKER OUTLET	+8'–0" OR CEILING	(SEE SPECS)	
P	POSITRON SYSTEM	+54" (OR AS NOTED) CONDUIT ONLY		
C	POSITRON SYSTEM	+7'–6" (OR AS NOTED)	(SEE SPECS)	

		VOLT.	AMP.	NEMA	RECEPT.	PH.	WIRE
1.	125	30 A.	5–30	9308 ●	1	3W
2.	250	20 A.	6–20	5462 ●	1	3W
3.	250	30 A.	6–30	9330	1	3W
4.	250	50 A.	6–50	9367	3	4W
5.	125/250	20 A.	14–20	8410	3	4W
6.	125/250	30 A.	14–30	9430	3	4W
7.	125/250	50 A.	14–50	9450	3	4W
8.						
9.						

* STANDARD MOUNTING HEIGHT, UNLESS NOTED OTHERWISE (ON PLANS)

ONE CIRCUIT – TWO WIRE – HOME RUN TO PANEL

TWO CIRCUIT – THREE WIRE – COMMON NEUTRAL – HOME RUN TO PANEL

THREE CIRCUIT – FOUR WIRE – COMMON NEUTRAL – HOME RUN TO PANEL

CONDUIT RUN (A) IN WALL OR CEILING, (B) IN FLOOR OR GROUND

CONDUIT (A) – UP, CONDUIT (B) – DOWN

(1) SEE FIXTURE SCHEDULE FOR TYPE, MOUNTING, AND WATTAGE
(2) WIRED FROM OUTLET BOX ADJACENT
(3) REFER TO DRAWINGS FOR DIRECTIONAL ARROWS
(4) SUBSCRIPT KEYS SWITCH TO OUTLETS CONTROLLED.
(5) EQUALS OF "BRYANT", "SIERRA", OR "HUBBELL", ARE ACCEPTABLE
(6) EQUALS OF "SQUARE–D", "G.E., OR A–B, ARE ACCEPTABLE.
(7) NEMA TYPE "ND" UNFUSED, UNLESS NOTED "F" (FUSED); USE "HD" FOR 480–VOLT
(8) # INDICATES SIZE AND/OR TYPE (SEE SPECIFICATIONS)
(9) EQUALS OF "PARAGON" AND "INTERMATIC" ARE ACCEPTABLE

ABBREVIATIONS

E.C.– ELECTRICAL CONTRACTOR
M.C.– MECHANICAL CONTRACTOR
T.C.– TEMP. CONTROL CONTR.
A.F.F.–ABOVE FINISHED FLOOR
A.F.G.–ABOVE FINISHED GRADE
B.F.G.–BELOW FINISHED GRADE
P.C.– POWER COMPANY
P.O.S.–POINT OF SALES
T – TELEPHONE
P– POWER
C– DATA

REVISIONS: NO. | DESCRIPTION | BY | DATE

DESIGNED BY | DRAWN BY | APPROVED | DATE

PANEL A | TYPE NQOD | FEED TOP ■ BOTTOM □ | VOLTAGE 120/240 | PHASE 1 | WIRES 3 | MAINS 225 AMP. □ LUGS ■ BRKR. | MOUNTING ■ FLUSH ■ SURFACE | DIMENSIONS 20 W, 5 3/4 D, 38 H | SPECIAL EQUIP | LOCATION

CIR. NO.	LOAD DESCRIPTION	NO. OUTLET LTS.	CO	MIS	FUSE P	AMP	WIRE SIZE	CIR. LOAD	COMBINED LOAD A	B	C	CIR. LOAD	WIRE SIZE	FUSE AMP	P	NO. OUTLET MIS	CO	LTS.	LOAD DESCRIPTION	CIR. NO.
1			5		1	20	12	1000	1500			500	12	20	1		3			2
3			1					500			1000	500					2			4
5			7					1000	2000			1000						11		6
7		8						800			2000	1200					7			8
9	HAND DRYER			1				1000	2300			1200					7			10
11	HAND DRYER			1				1000			2000	1000				1			HAND DRYER	12
13	HAND DRYER			1				1000	2000			1000				1			HAND DRYER	14
15	HAND DRYER			1				1000			2000	1000				1			HAND DRYER	16
17	PUMP KIT			2				1000	2000			1000				1			HAND DRYER	18
19	CEILING FAN			2				500			2000	1500	10					15	THRU E.E.	20
21			6					1000	2200			1200						12		22
23	SPARE										600	600						6		24
25			5				12												SPARE	26
27	WATER HEATER			1	2	30	(30)	3000			3000									28
	—				—	—		3000	3000											30
29	HEAT PUMP			1	2	30	(30)	2500			5000	2500	(30)	30	2	1			HEAT PUMP	32
	—				—	—		2500	5000			2500	—	—	—				—	
31	SPARE			1	2	30					1500	1500	(212)	20	2	2			SUPPLY–EX. FANS	34
	—				—	—			1500			1500	—	—	—				—	
33	SPARE											900	8	30	2	1			WELL THRU CONVERTER	36
35												900	—	—	—				—	
37														20	1	1			WELL CONTROLS	38
39																			SPARE	40
40																				42

TOTAL CONNECTED LOAD 41 K.W. | FEED BRKR. SIZE 400 AMPS.

21500		19100
TOTALS		
179		159
AMPS. PER PHASE		

CONDUIT AND WIRE SIZE (340)

NOTES

SCHEDULE–CONDUIT CONDUCTORS

TYPE	AMP.	COND. SIZE	CONDUCTOR QUAN.	CONDUCTOR SIZE	INSULATION
(212)	20	3/4	2	12	THHN
(312)			3		
(412)			4		
(20)	30		2	10	
(30)			3		
(40)			4		
(28)	50		2	8	
(38)			3		
(48)		1	4		
(26)	65		2	6	
(36)			3		
(46)			4		
(34)	85	1 1/4	3	4	
(44)			4		
(32)	115	1 1/2	3	2	
(42)			4		
(311)	130		3	1	
(411)			4		
(310)	150	2	3	1/0	
(410)			4		
(320)	175		3	2/0	
(420)			4		
(330)	200	2 1/2	3	3/0	
(430)			4		
(340)	230		3	4/0	
(440)			4		
(325)	255		3	250	
(425)			4		
(335)	310	3	3	350	
(435)			4		
(350)	380	3 1/2	3	500	
(450)			4		

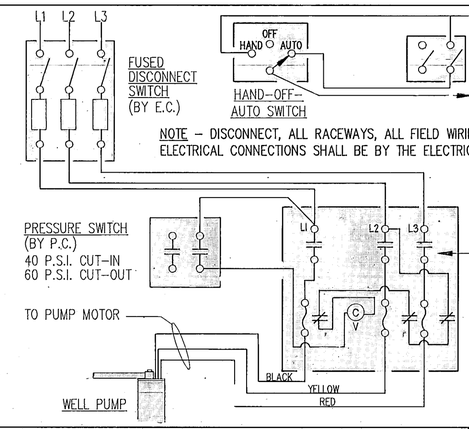

NOTE – DISCONNECT, ALL RACEWAYS, ALL FIELD WIRING AND ELECTRICAL CONNECTIONS SHALL BE BY THE ELECTRICAL CONTRACTOR.

DETAIL – WELL CONTROLS

NO SCALE | 1 / E–4

DETAIL – POLE BASE

NO SCALE | 2 / E–4

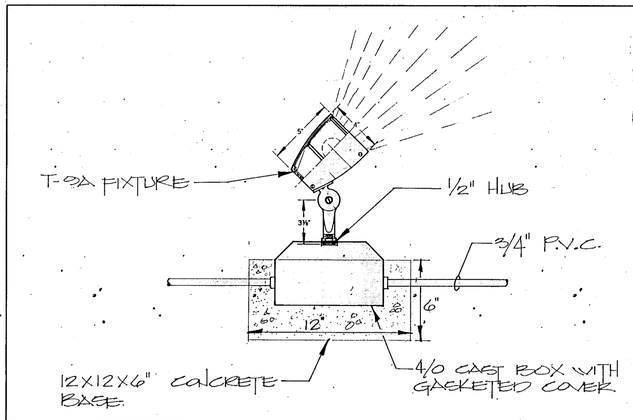

DETAIL – FIXTURE BASE

NO SCALE | 4 / E–4

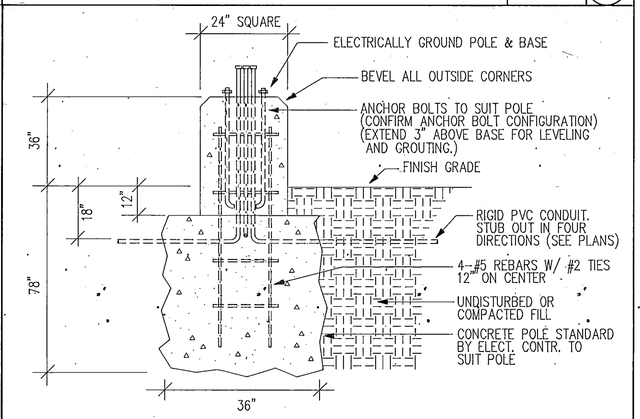

DETAIL – POLE BASE

NO SCALE | 3 / E–4

REGISTERED PROFESSIONAL ENGINEER 1266 State of Idaho Arthur H. Nielson, Jr.

OWNERSHIP OF DOCUMENTS

This document and the ideas and designs incorporated herein, as an instrument of professional service, is the property of NIELSON ENGINEERING, INC. and is not to be used, in whole or in part, for any other project without the written authorization of an authorized representitive of NIELSON ENGINEERING, INC.

Unauthorized use will be prosecuted to the fullest extent of the Law.

Copyright © 1989 by NIELSON ENGINEERING, INC.

sheet title: REST AREA DETAILS AND SCHEDULES
project: CHERRY CREEK REST AREA
revised:

Nielson Engineering, Inc.
Consulting Engineers
120 North Twelfth Avenue
Pocatello, Idaho 83201
(208) 232–2577

date | job. no. | sheet E–4 | of